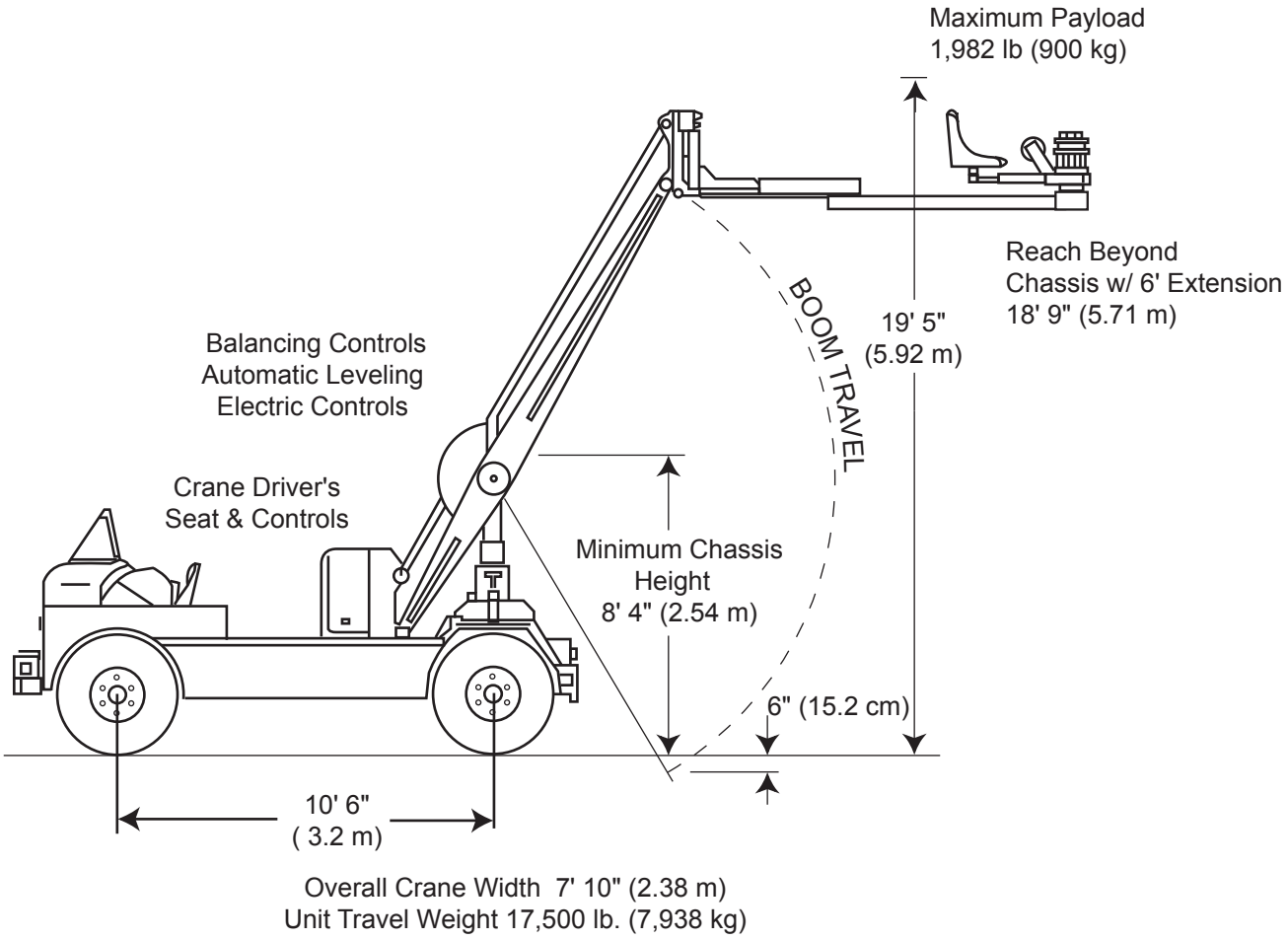

Overall Crane Width 7' 10" (2.38 m)
Unit Travel Weight 17,500 lb. (7,938 kg)