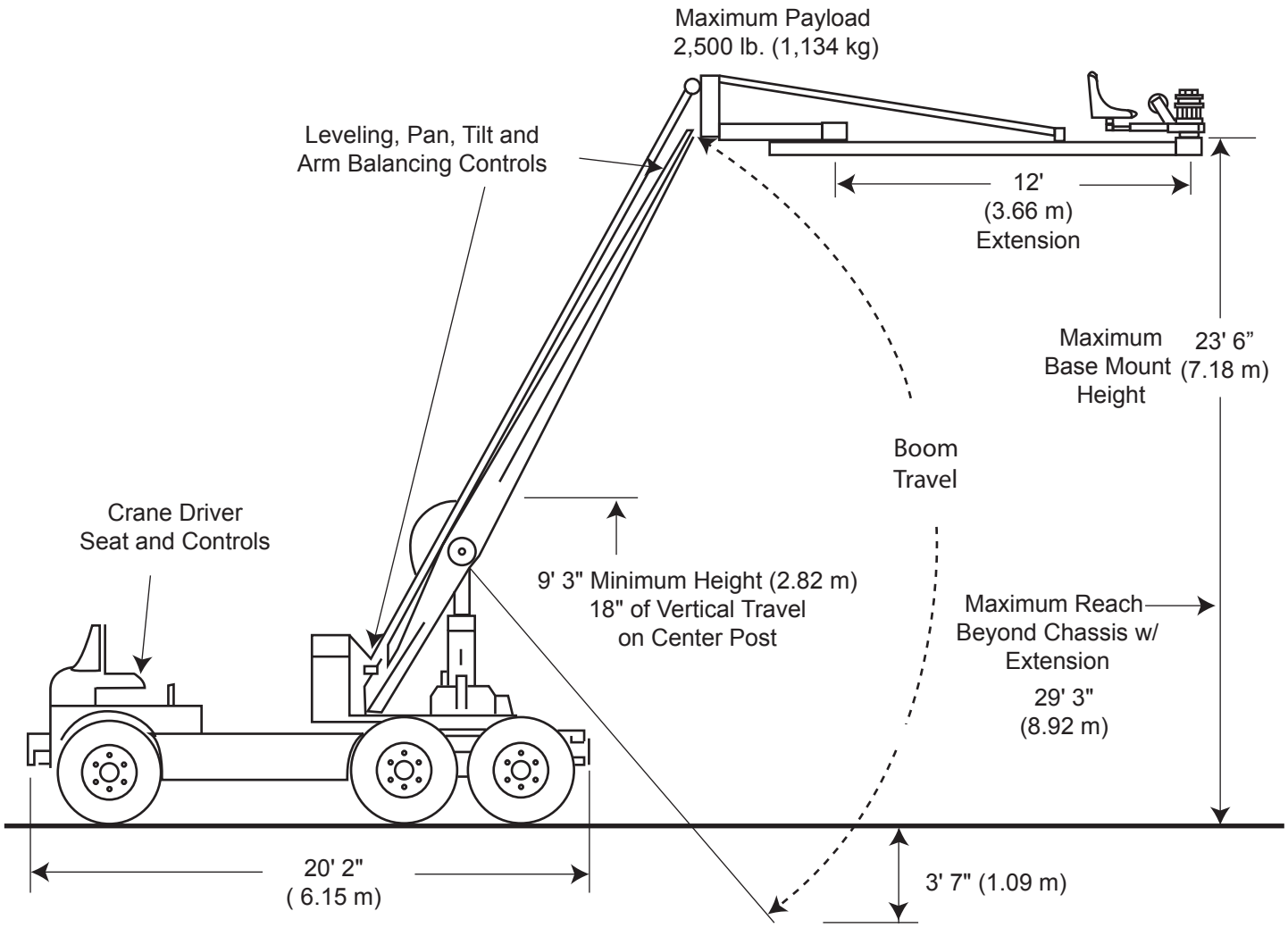
Maximum Payload
2,500 lb. (1,134 kg)
Leveling, Pan, Tilt and
Arm Balancing Controls
12'
(3.66 m)
Extension
Maximum
Base Mount
Height
23' 6"
(7.18 m)
Boom
Travel
Crane Driver
Seat and Controls
9' 3" Minimum Height (2.82 m)
18" of Vertical Travel
on Center Post
Maximum Reach
Beyond Chassis w/
Extension
29' 3"
(8.92 m)
20' 2"
(6.15 m)
3' 7" (1.09 m)