CHAPMAN/LEONARD
STUDIO EQUIPMENT INC.

Miniscope 5 & 7

User Manual

Operational Instructions & Specifications

Miniscope 5 & 7

User Manual

Operational Instructions & Specifications

Edition 2

CHAPMAN

Chapman/Leonard Certified Locations

Main Office

12950 Raymer Street,
North Hollywood, CA 91605

Toll Free:
(888) 883-6559
(818) 764-6726

FAX:
Rentals: (818) 764-6730
Leasing: (818) 764-4347
Accounting: (818) 764-9391

Georgia

2000 McFarland 400 Blvd.
Alpharetta, GA 30004

Toll Free:
(888) 758-4826

FAX:
(678) 583-1858

UK & Europe

Chapman Leonard Studio Equipment, Ltd.
Unit 2
North Orbital Commercial Park
Napsbury Lane, St. Albans, Herts
England AL1 1XB

Phone:
+44 1 727 838424

FAX:
+44 1 727 852241

Louisiana

668 Distributors Row Suite E
Elmwood Business Park
New Orleans, LA 70123

Toll Free:
(888) 758-4826
(504) 731-6050

FAX:
(504) 731-6051

Texas

1901 E. 51st Street
Austin, Texas 78723

Toll Free:
(888) 758-4826
(512) 473-0084

FAX:
(512) 473-0042

Miniscope 5 & 7 User Manual

The Operator should be qualified to operate
equipment as expressed in this manual.

For assistance please call our 24-hour
Customer Service.

+1 (888) 883-6559
chapman-leonard.com

Contents

Safety Features
Miniscope 5 & 7

Warning!
Always test safety in movement before running a scene with all actors, set and crew in place.

The Miniscope is a light-weight, user friendly Telescoping Arm that has been made to be used on our specially designed Minibase as well as our Ultra Hy Hy Base, Hybrid IV and Hustler camera dollies. The Miniscope can be operated by one person, and may or may not require the assistance of a highly trained technician. This manual will give you all you need to know to effectively set up and operate the Miniscope.

Nose Struts

Must be attached to the nose of the Hybrid IV Dolly. Position the nose of the Hybrid IV toward the center of the dolly. This will ensure maximum safety and stability when operating the Miniscope

Chapman Battery or AC/DC Converter

Should be placed toward the back of the dolly to maintain maximum stability. Both the AC/DC converter and Battery come with the Miniscope standard package. Added weight at this point will add stability in the Miniscope / Hybrid configuration.

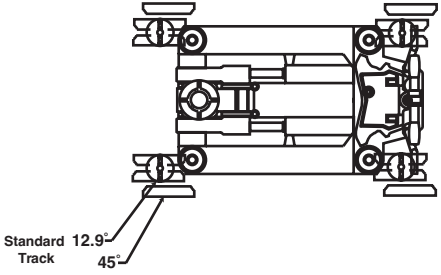

Hybrid Dolly Wheels

Should be positioned at the 12° or 45° position for maximum stability and safety.

Roller Guides and Rails

Must be kept clean. Wipe with a clean rag.

Safety in Use of the Inetial Effect

Safety Features

The Miniscope can be used safely by following these tips to neutralize the inertial effect.

1 The Push Rod should be fully extended.

2 The Push Rod should be pushed at the top by the handle.

3 The Battery, AC/DC converter or sandbags should be placed on the back of the dolly to ad weight to the base.

4 When used in crab mode for lateral movement, the dolly legs should be swiveled out to widen the base. **(fig. A)**

5 Always perform a test run to determine safety in movement before actual shooting takes place.

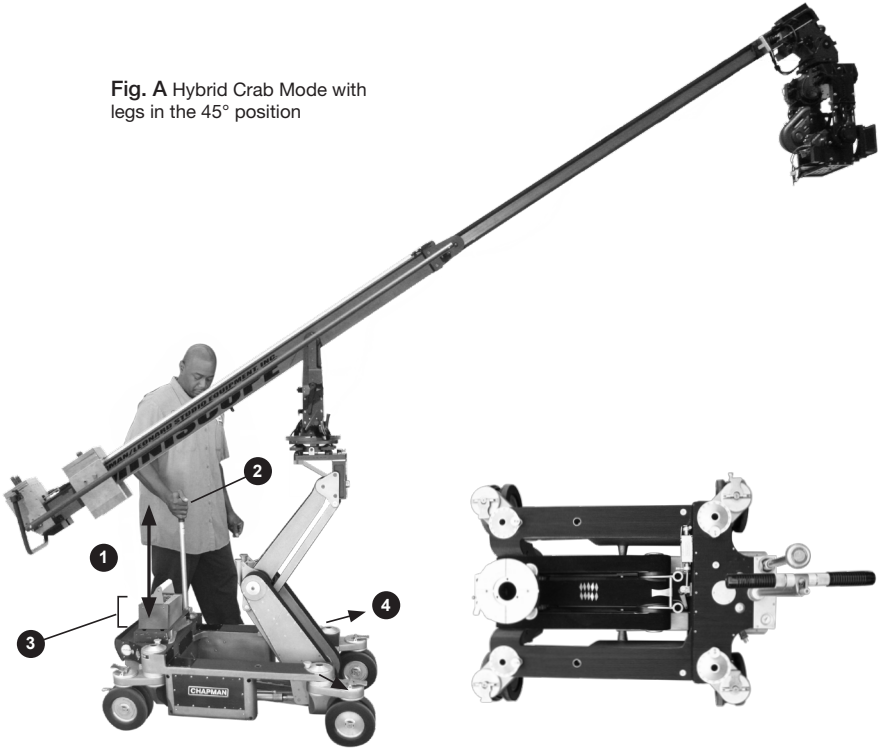

Fig. A Hybrid Crab Mode with legs in the 45° position

There are six places for the push bar. The push bar can be used anywhere to avoid being in the way of the arm/camera operator.

Caution!
The Miniscope and Dolly system should be handled in this area to avoid a tip-over when pushing the dolly.

Warning!
Pushing, pulling or stopping at the base of the chassis should be avoided.

Troubleshooting

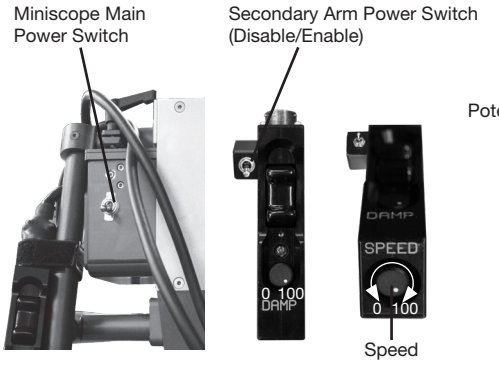

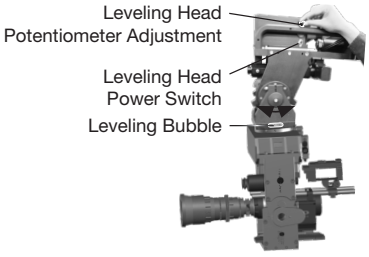

Adjust drift until Miniscope is stationary. To completely eliminate drift, turn off the Miniscope main power or secondary arm power switch.

1. **The Miniscope will not telescope when activating the Joystick Control.**

   A. Connect main power source and apply power.
   B. Remove the safety locking pin from the rear of the Miniscope arm.
   C. Turn on the Miniscope main power switch located at the rear of the arm.
   D. Turn on the secondary power switch located on the joystick.
   E. Set the speed control to the center position located on the joystick.

2. **The leveling head is not level.**

   A. Connect main power source and apply power.
   B. Turn on the leveling head power switch located on the leveling head.
   C. Adjust the leveling head potentiometer to achieve proper level. Before the leveling head is adjusted make sure the post on the base is level.
   D. Make sure the underslung/ overslung switch is in the correct position.

3. **The arm is drifting in or out.**

   A. Extend or retract the arm so the weights are over the fulcrum. Adjust the drift knob located on the joystick control.
   B. Please note that the arm may drift (push back) at the extreme stops in order to prevent damage to the motor assembly. You may use the enable/disable power switch feature located on the joystick to prevent drift.

Features and Specifications
Miniscope 5 & 7

Power
The Miniscope and Minibase are electrically powered by a 30v Chapman Battery or AC/DC converter.

Weight Carriage
Acts as a counter-balance to the nose payload as it slides along the column. The tray moves forward when the arm is retracting, and the tray slides back when the arm is extending.

Trim Weight Bucket
The bucket is located in the rear of the Miniscope and is where trim weight is applied in the balancing process.

Sliding Fine-Tuning Weights
Are adjusted by loosening the Knurled Knobs, sliding the weight, and tightening the knob again. These are used for fine-tuning the balance when balancing the Miniscope.

Mitchell Mount
The nose is located at the very front of the Miniscope. This is where the head and camera are mounted to the Mitchell Mount.

Pan Friction Handle
Is designed to minimize float on still shots when the Miniscope is balanced. It is not intended as a safety brake for walking away or shipping.

Tilt Friction Handle
Is designed to minimize float on still shots when the Miniscope is balanced. It is not intended as a safety brake for walking away or shipping.

The Locking Bar
Is located underneath the arm. This locks the arm in the horizontal position. The bar needs to be locked in place when the Miniscope is being balanced. The pin will create play where the locking bar meets the arm to aid in the balancing of the Miniscope. When the locking bar floats on the pin the Miniscope is balanced. **Warning! DO NOT remove locking bar when miniscope is out of balance. DO NOT use ratchet straps to tie down as it may stress the arm.**

The Arm Locking Pin
This is located toward the back of the arm (on the right side when looking toward the front of the Miniscope), in front of the bucket. The pin will lock the Miniscope arm in the retracted position to disable the telescoping function. **Warning! The locking pin should remain in the arm when being transported or not in use.**

Automatic Electronic Stops
Provide feathered stops when reaching the end of the extension or retraction.

Mechanical Soft Stops
Provides a secondary stop to prevent a mechanical hard stop at the extreme limits of the arm.

Features and Specifications

Diagram

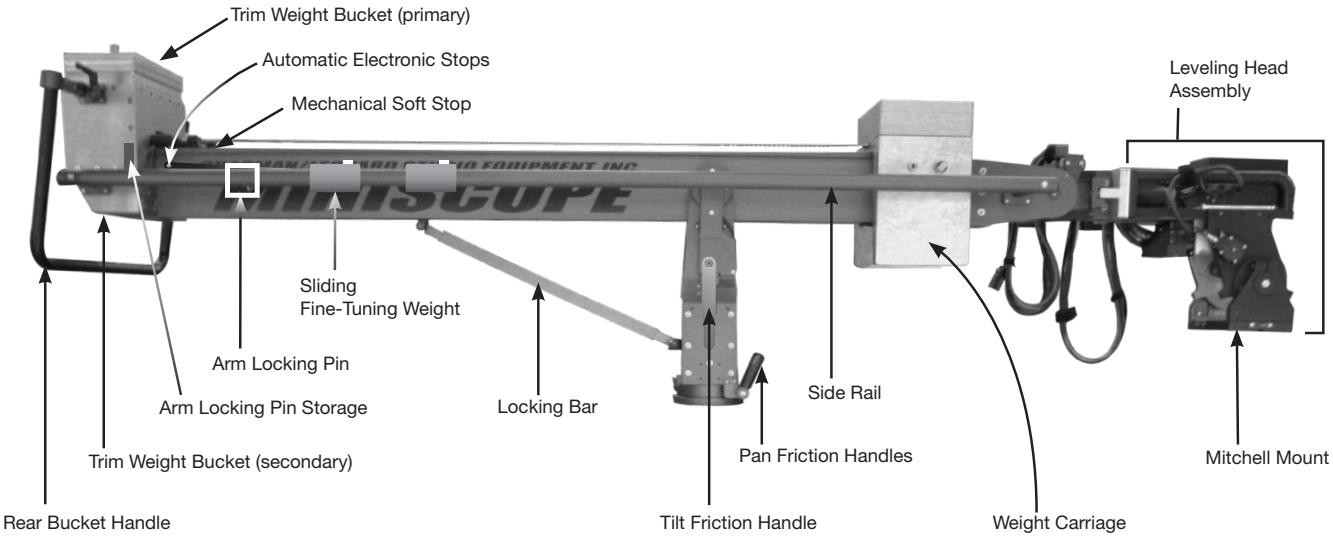

Quick Start Key
Configuration

1. Choose a Base

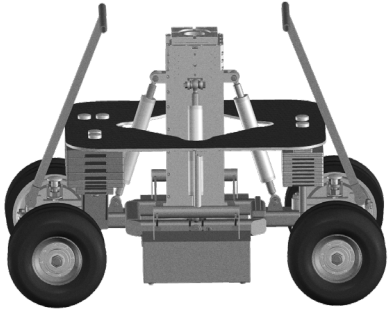

Minibase (Main System)

Hybrid IV Dolly

Hustler IV Dolly

Quick Start Key
Continued

2. Mount the Miniscope

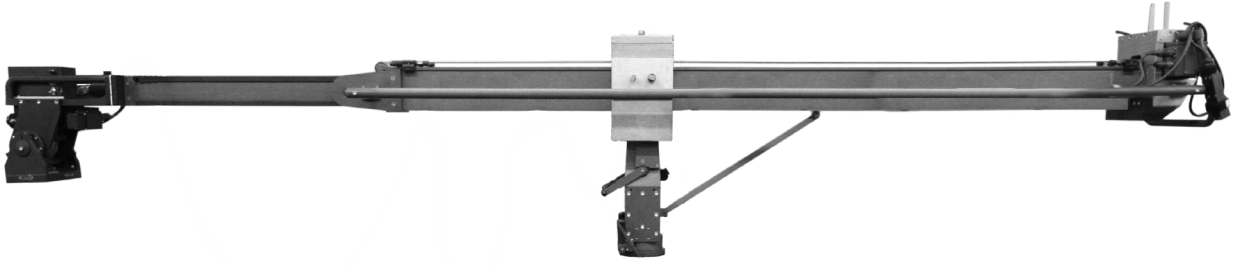

3. Choose a Remote Head

4. Choose a Power Source

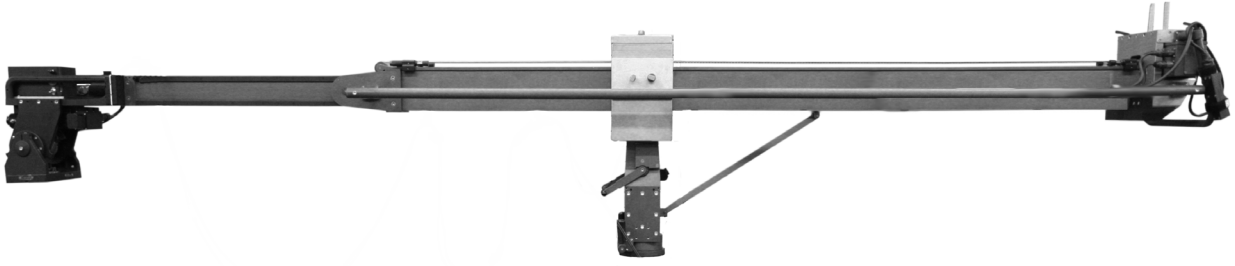

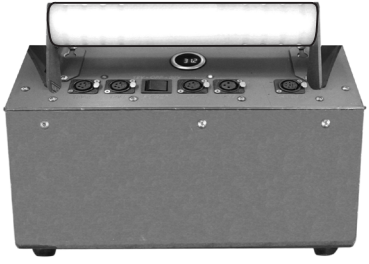

110-240v AC/DC converter

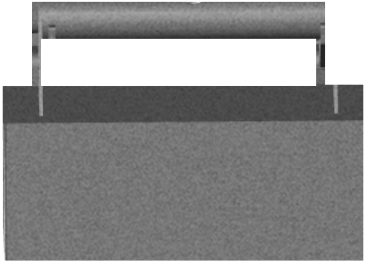

Chapman/Leonard DC Battery

Specifications on the Minibase

Miniscope 5

Miniscope mounted on a Minibase with CL Stabilized Head. Measurement from lens to Mitchell Mount approximately 20”.

Maximum Payload	150 lbs
Telescoping Travel	4 ft 8 in
Min Reach From Fulcrum	3 ft 10 in
Max Reach From Fulcrum	8 ft 6 in
Max Telescoping Travel Speed	3.5 ft/sec
Max Weight Fully Loaded	650 lbs
Weight: Arm NO Payload	265 lbs
Weight: Arm Stripped	190 lbs
Shipping Weight	750 lbs
Electrically Powered	30 volts
Power Source	AC/DC Converter or Battery
Vertical Travel on Minibase	16in
Base Weight	230lbs

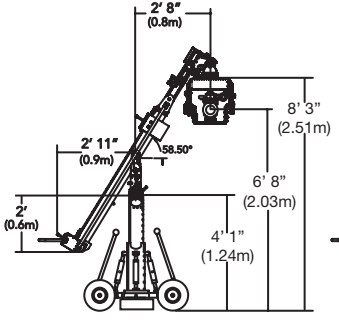

Underslung Retracted

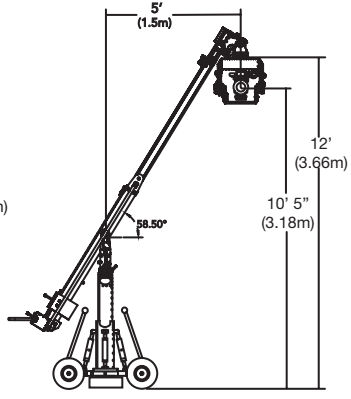

Underslung Extended

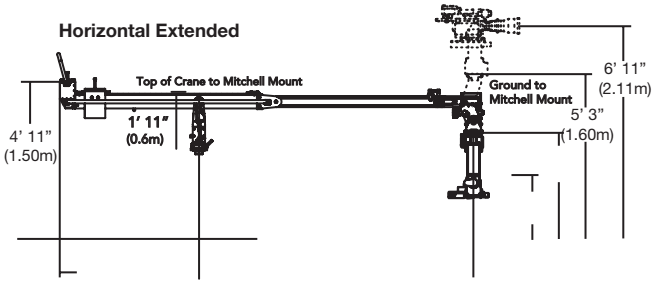

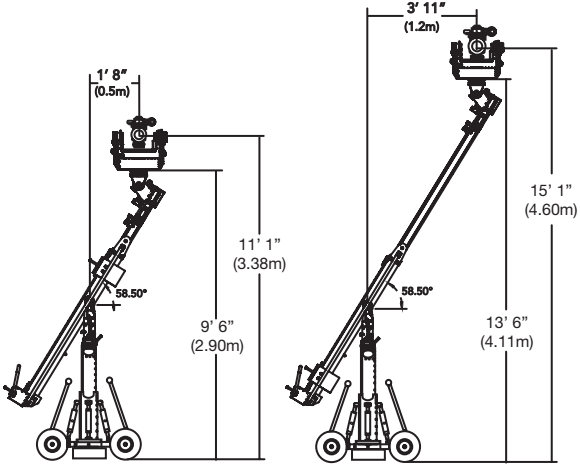

Overslung Retracted

Overslung Extended

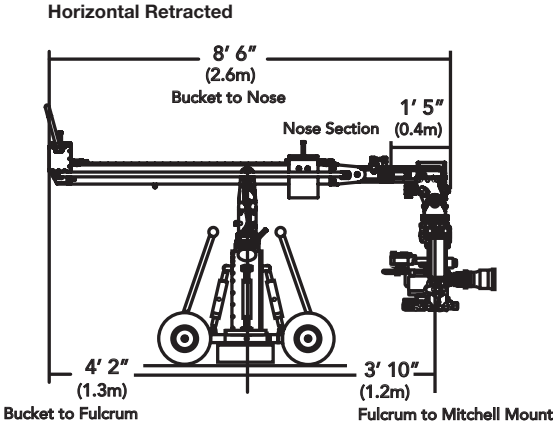

Specifications on the Minibase
Miniscope 7

Miniscope mounted on a Minibase with CL Stabilized Head. Measurement from lens to Mitchell Mount approximately 20”.

Maximum Payload	150 lbs
Telescoping Travel	6 ft 9 in
Min Reach From Fulcrum	4 ft 8 in
Max Reach From Fulcrum	11 ft 4 in
Max Telescoping Travel Speed	3.5 ft/sec
Max Weight Fully Loaded	780 lbs
Weight: Arm NO Payload	285 lbs
Weight: Arm Stripped	225 lbs
Shipping Weight	800 lbs
Electrically Powered	30 volts
Power Source	AC/DC Converter or Battery
Vertical Travel on Minibase	16in
Base Weight	230 lbs

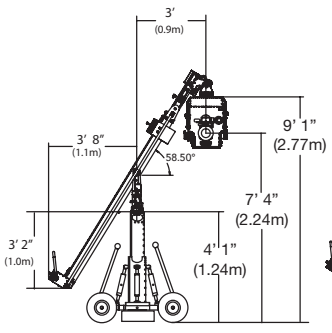

Underslung Retracted

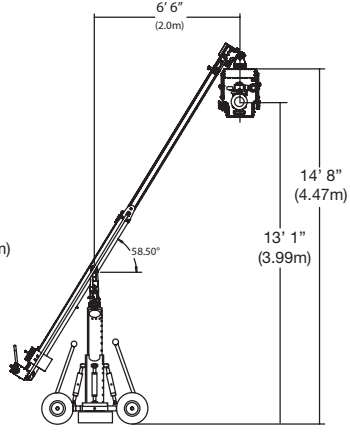

Underslung Extended

Horizontal Extended

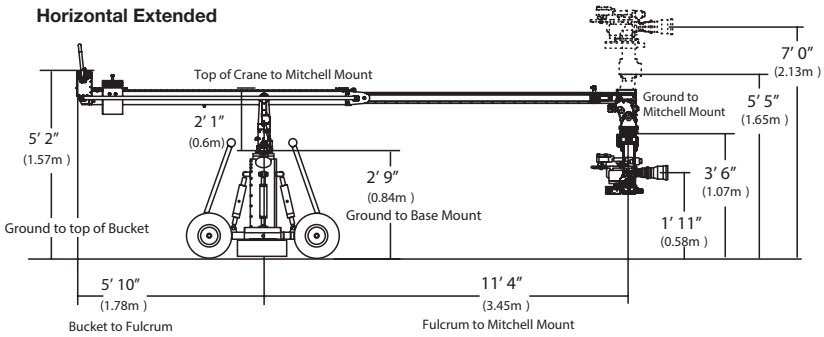

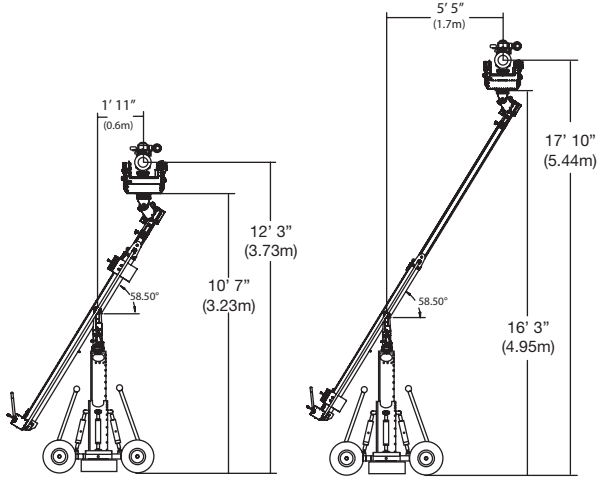

Overslung Retracted **Overslung Extended**

Horizontal Retracted

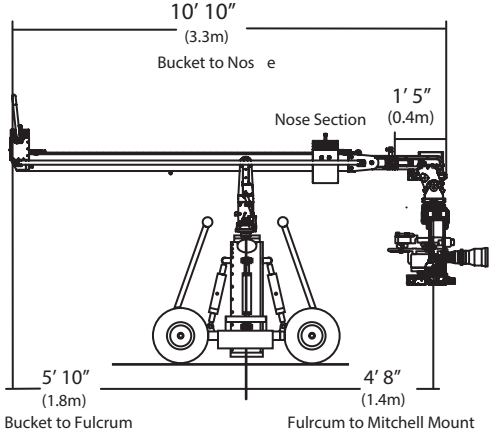

Specifications on the Hybrid IV Dolly

Miniscope 5

Miniscope mounted on a Hybrid IV dolly with CL Stabilized Head. Measurement from lens to Mitchell Mount approximately 20”.

Maximum Payload	150 lbs
Telescoping Travel	4 ft 8 in
Min Reach From Fulcrum	3 ft 10 in
Max Reach From Fulcrum	8 ft 6 in
Max Telescoping Travel Speed	3.5 ft/sec
Max Weight Fully Loaded	650 lbs
Weight: Arm NO Payload	265 lbs
Weight: Arm Stripped	190 lbs
Shipping Weight	750 lbs
Electrically Powered	30 volts
Power Source	AC/DC Converter or Battery
Vertical Travel on Hybrid IV	3ft 8in
Base Weight	463 lbs

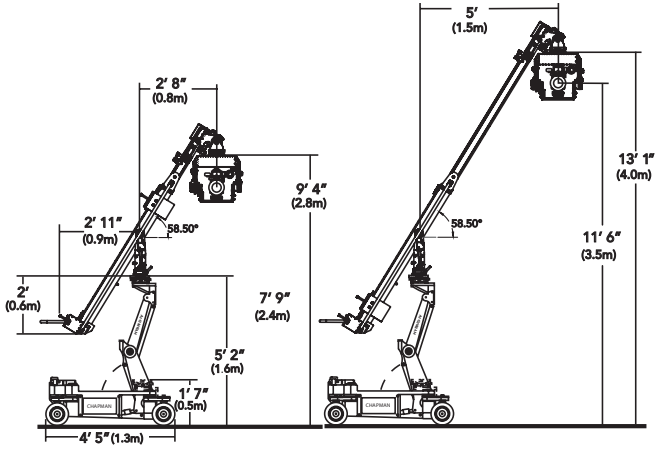

Underslung Retracted **Underslung Extended**

Horizontal Extended

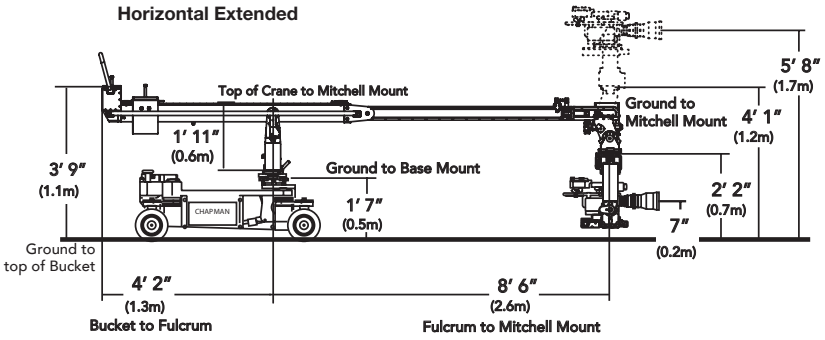

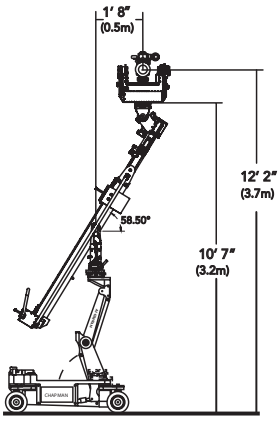

Overslung Retracted

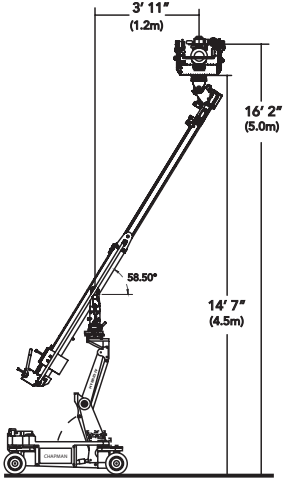

Overslung Extended

Horizontal Retracted

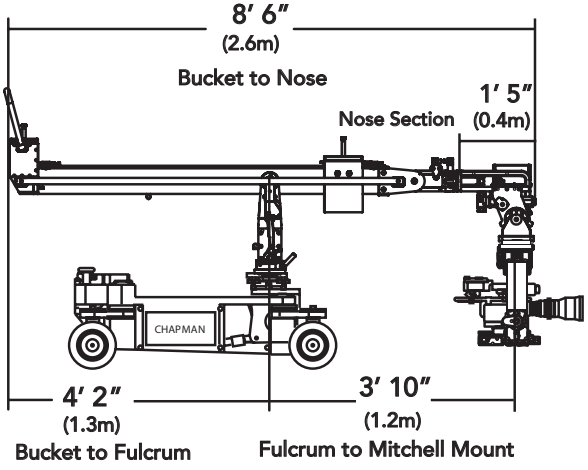

Detailed Specifications on the Hybrid IV Dolly

Miniscope 5

The Minscope can be mounted on the Hybrid IV Dolly to be used for low shots at the edge of a stage, boat dock, street etc, as well as curved track. With the Hybrid IV Underslung, arm boomed to the lowest point and the Miniscope fully extended, the lens can be lowered below ground to **5 feet and 5 inches**. On the Hybrid IV the Miniscope can achieve a vertical travel of **16 feet 11 inches** with the combined movement of the dolly arm lift and vertical arm tilt.

The Miniscope is pictured in the UNDERSLUNG position using Chapman/ Leonard's CL Stabilized Head.

Underslung Retracted

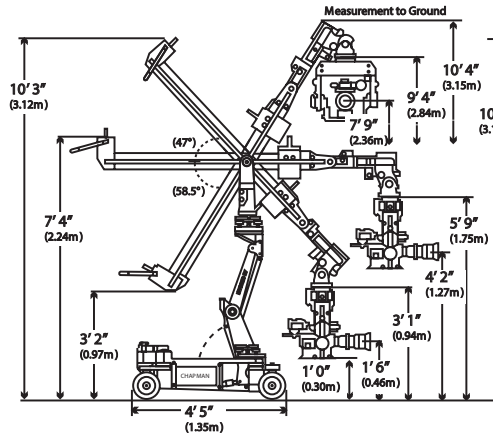

Underslung Extended

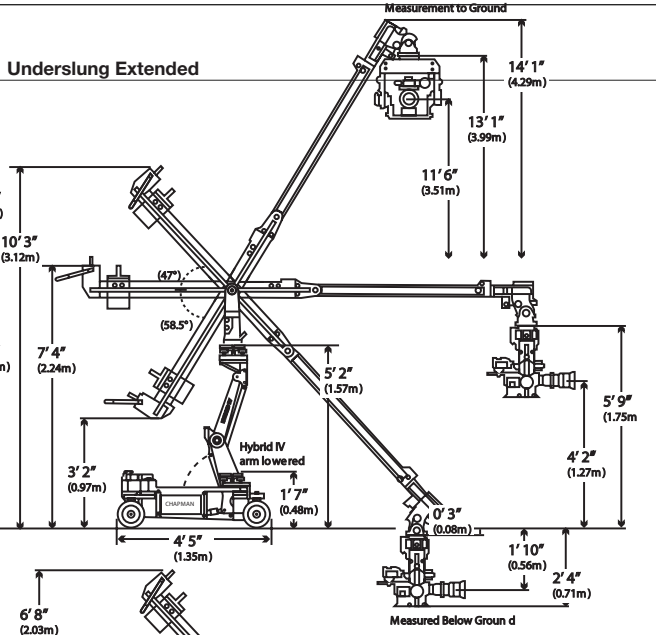

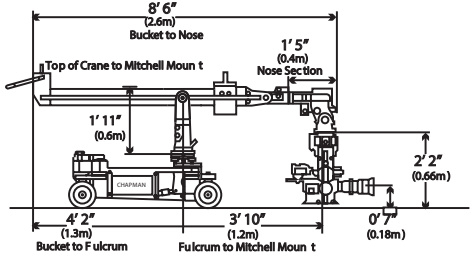

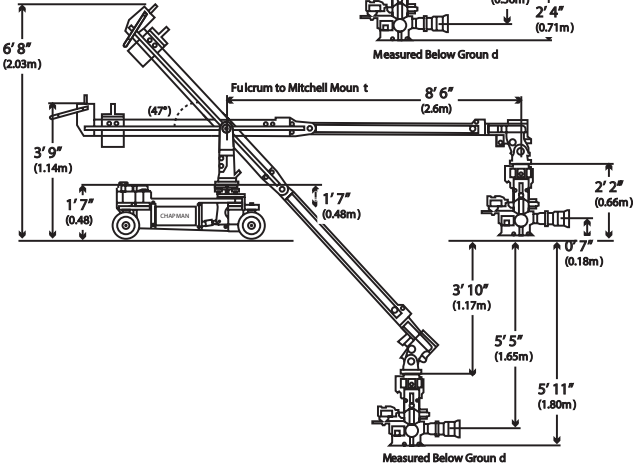

Detailed Specifications on the Hybrid IV Dolly

Miniscope 5

The Miniscope is pictured in the Overslung position giving the Miniscope the most height. The lens is at **16 feet and 2 inches** with they Hybrid IV arm boomed to its highest point and the Miniscope fully extended. On the Hybrid IV, the operator can achieve a vertical travel of **16 feet 11 inches** with the combined movement of the dolly arm lift and vertical arm tilt.

The Miniscope is pictured in the OVERSLUNG position using Chapman/ Leonard's CL Stabilized Head.

Overslung Retracted

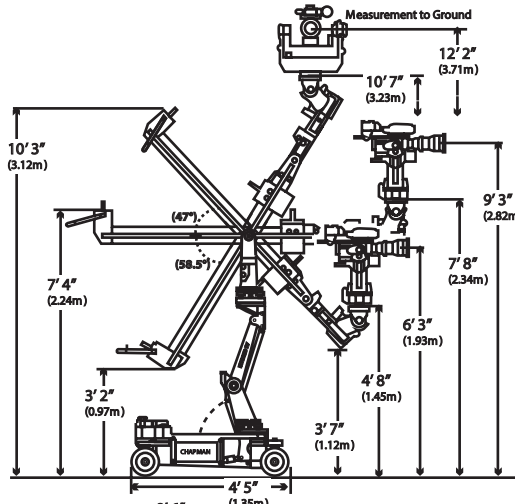

Overslung Extended

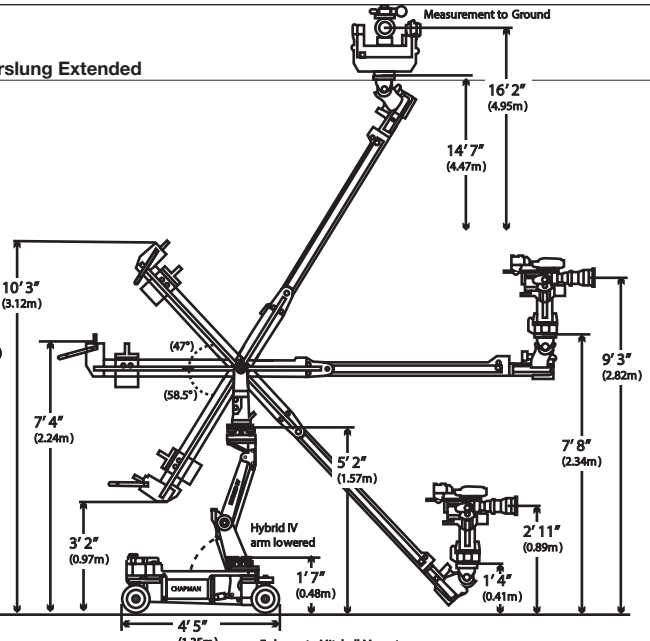

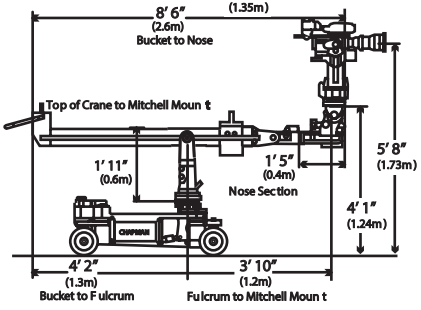

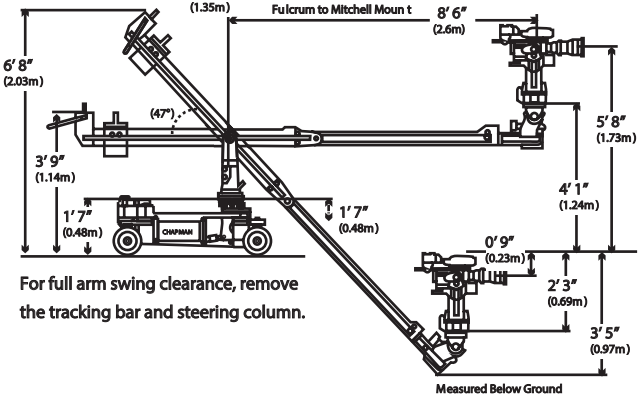

For full arm swing clearance, remove the tracking bar and steering column.

Specifications on the Hybrid IV Dolly

Miniscope 7

Miniscope mounted on a Hybrid IV dolly with CL Stabilized Head. Measurement from lens to Mitchell Mount approximately 20”.

Maximum Payload	150 lbs
Telescoping Travel	6 ft 9 in
Min Reach From Fulcrum	4 ft 8 in
Max Reach From Fulcrum	11 ft 4 in
Max Telescoping Travel Speed	3.5 ft/sec
Max Weight Fully Loaded	780 lbs
Weight: Arm NO Payload	285 lbs
Weight: Arm Stripped	225 lbs
Shipping Weight	800 lbs
Electrically Powered	30 volts
Power Source	AC/DC Converter or Battery
Vertical Travel on Hybrid IV	3ft 8in
Base Weight	463 lbs

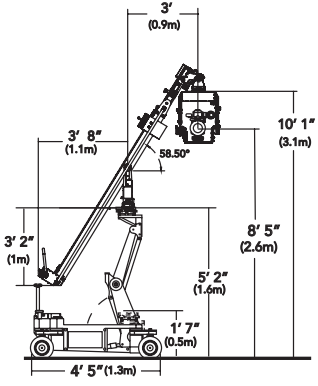

Underslung Retracted

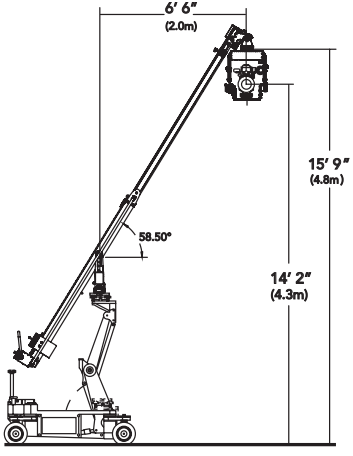

Underslung Extended

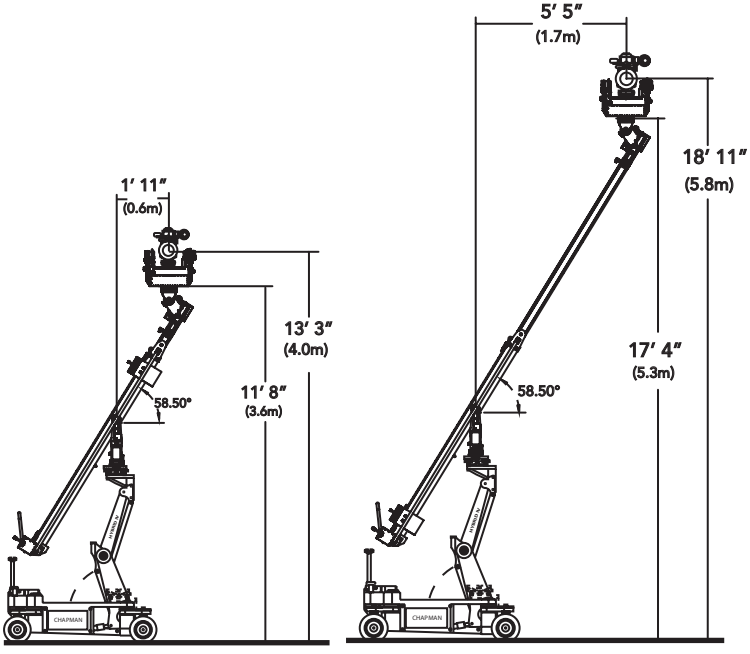

Overslung Retracted Overslung Extended

Detailed Specifications on the Hybrid IV Dolly

Miniscope 7

The Miniscope can be used on a variety of shots and locations. The Miniscope can be mounted on the Hybrid IV Dolly to be used for low shots at the edge of a stage, boat dock, street etc, as well as curved track. With the Hybrid IV Underslung, arm boomed to the lowest point and the Miniscope fully extended, the lens can be lowered below ground to **8 feet**. On the Hybrid IV the operator can achieve a vertical travel of **22 feet 2 inches** with the combined movement of the dolly arm lift and vertical arm tilt.

The Miniscope is set in the UNDERSLUNG position using Chapman/Leonard's CL Stabilized Head.

Underslung Retracted

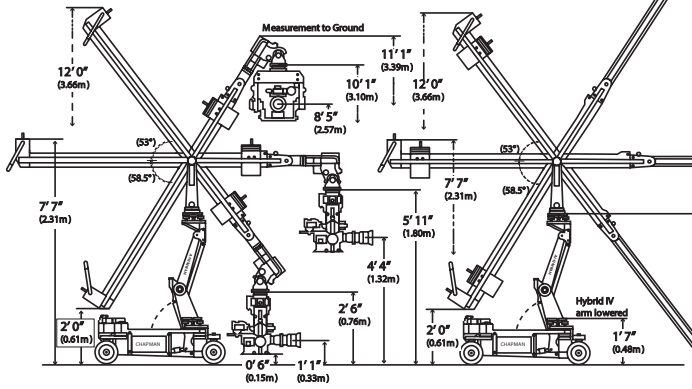

Underslung Extended

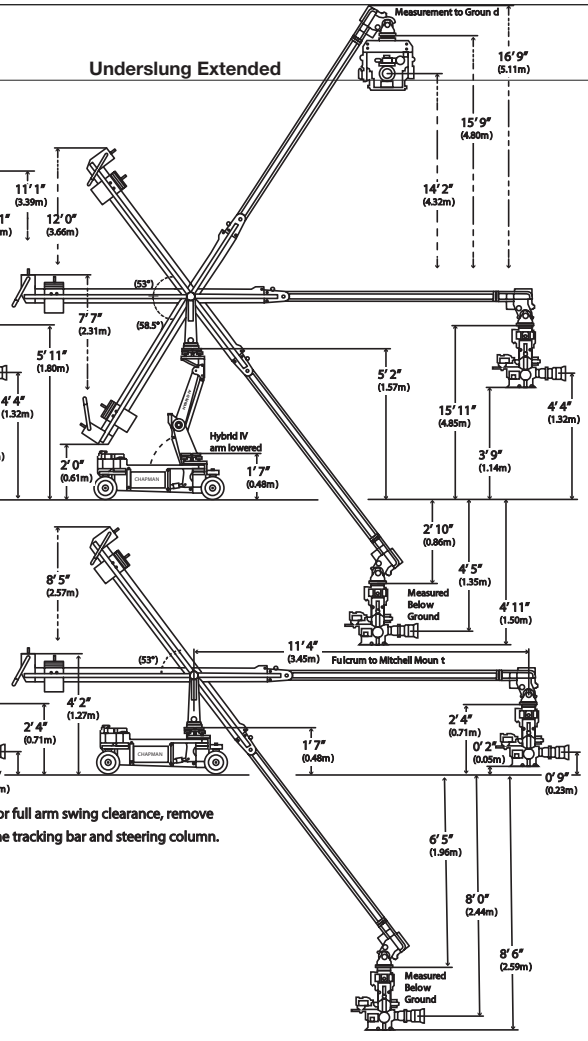

For full arm swing clearance, remove the tracking bar and steering column.

Detailed Specifications on the Hybrid IV Dolly

Miniscope 7

The Miniscope pictured in the Overslung position giving the operator more height. The lens is at **18 feet and 11 inches** with the Hybrid IV arm boomed to its highest point with a fully extended Miniscope. On the Hybrid IV the operator can achieve a vertical travel of **22 feet 3 inches** with the combined movement of the dolly arm lift and vertical arm tilt.

The Miniscope is set in the OVERSLUNG position using Chapman/Leonard's CL Stabilized Head.

Overslung Retracted

Overslung Extended

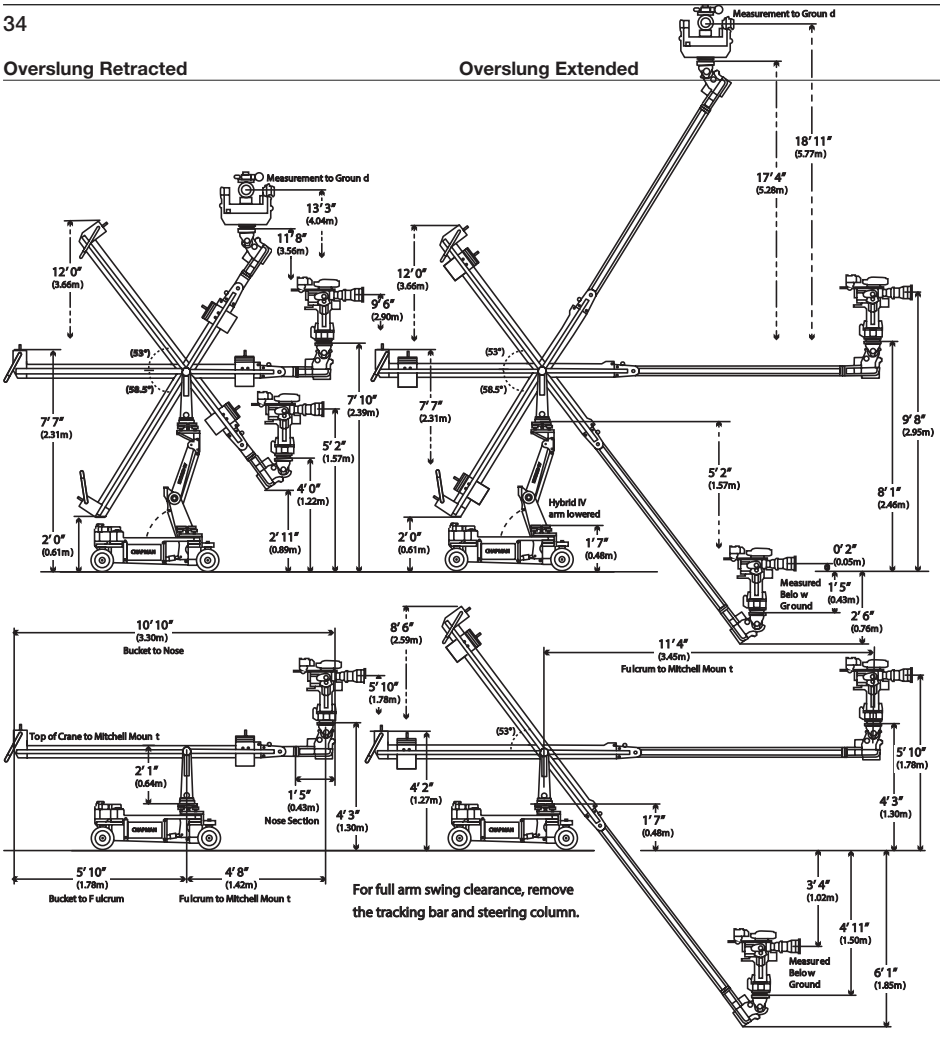

Specifications on the Ultra HY HY Base

Miniscope 5

Miniscope mounted on a Ultra HY HY Base with CL Stabilized Head. Measurement from lens to Mitchell Mount approximately 20”.

Maximum Payload	150 lbs
Telescoping Travel	4 ft 8 in
Min Reach From Fulcrum	3 ft 10 in
Max Reach From Fulcrum	8 ft 6 in
Max Telescoping Travel Speed	3.5 ft/sec
Max Weight Fully Loaded	650 lbs
Weight: Arm NO Payload	265 lbs
Weight: Arm Stripped	190 lbs
Shipping Weight	750 lbs
Electrically Powered	30 volts
Power Source	AC/DC Converter or Battery
Vertical Travel on Ultra Hy Hy	15.5 in
Base Weight	500 lbs

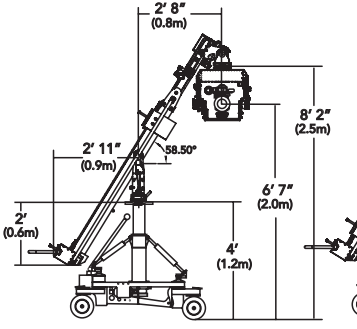

Underslung Retracted

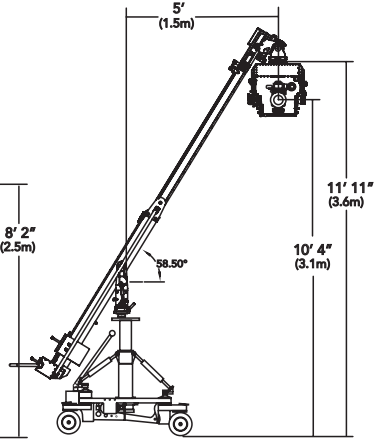

Underslung Extended

Horizontal Extended

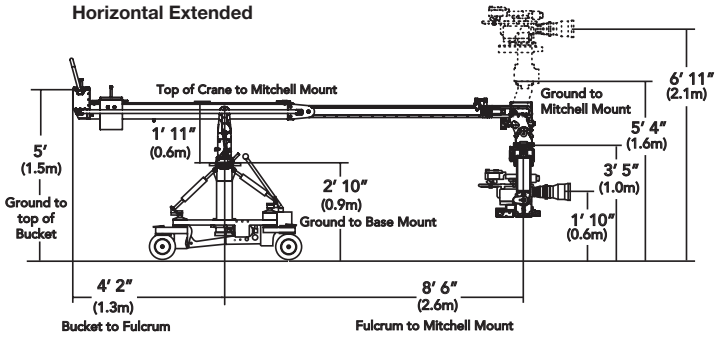

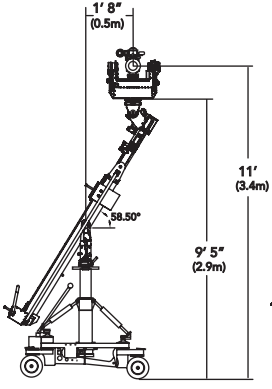

Overslung Retracted

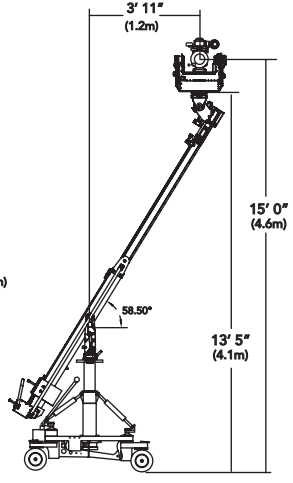

Overslung Extended

Horizontal Retracted

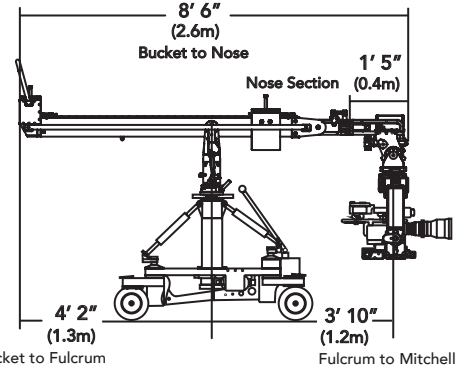

Specifications on the Ultra HY HY Base

Miniscope 7

Miniscope mounted on a Ultra HY HY Base with CL Stabilized Head. Measurement from lens to Mitchell Mount approximately 20”.

Maximum Payload	150 lbs
Telescoping Travel	6 ft 9 in
Min Reach From Fulcrum	4 ft 8 in
Max Reach From Fulcrum	11 ft 4 in
Max Telescoping Travel Speed	3.5 ft/sec
Max Weight Fully Loaded	780 lbs
Weight: Arm NO Payload	285 lbs
Weight: Arm Stripped	225 lbs
Shipping Weight	800 lbs
Electrically Powered	30 volts
Power Source	AC/DC Converter or Battery
Vertical Travel on Ultra Hy Hy	15.5in
Base Weight	500 lbs

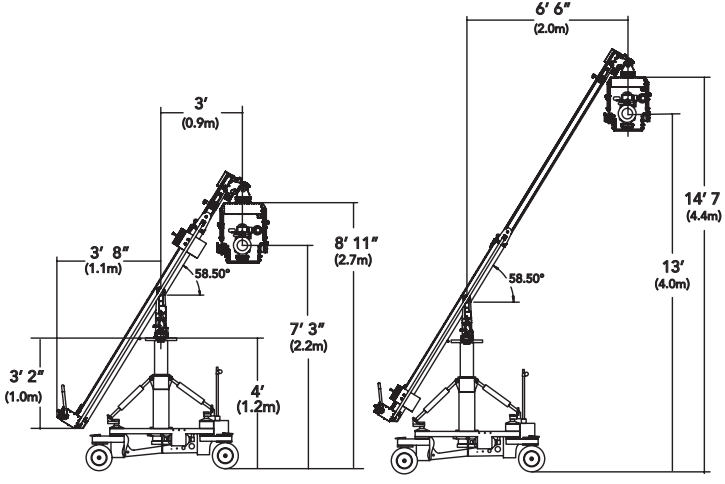

Underslung Retracted Underslung Extended

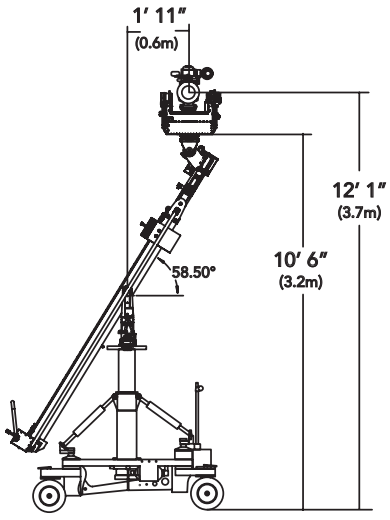

Overslung Retracted

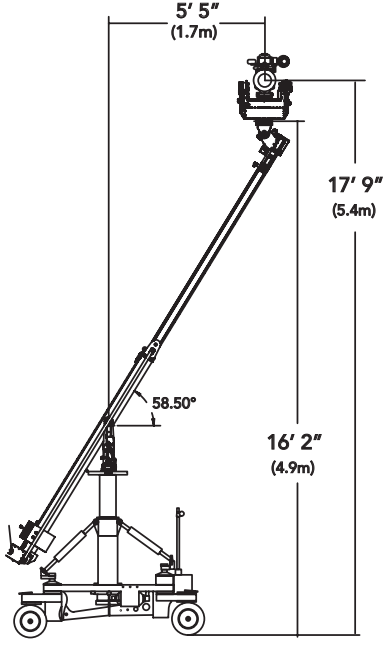

Overslung Extended

Alternate Positions

Miniscope 5

Position 1 - Standard Position

The Miniscope Alternate Position is easy to achieve by removing a few bolts from the adjustable fulcrum. This position is used to shorten the rear section of the Miniscope for tight spaces, and increase the reach where necessary.

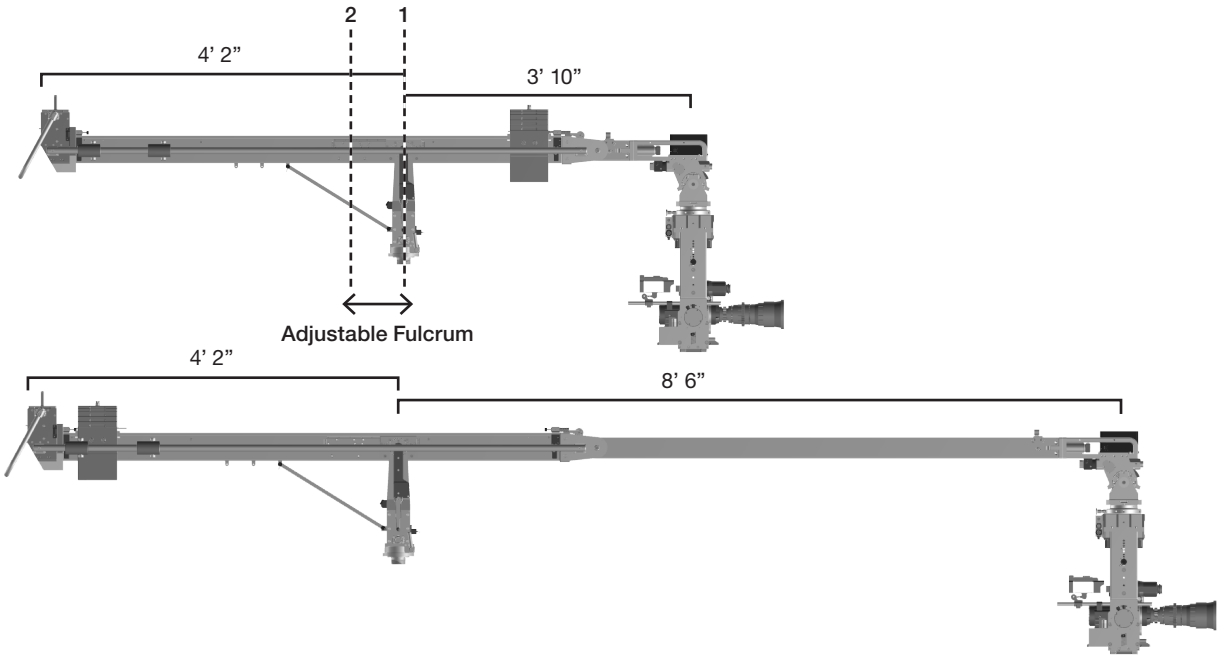

Position 2

An estimated 120-130 lb must be added as counter weight in this configuration.

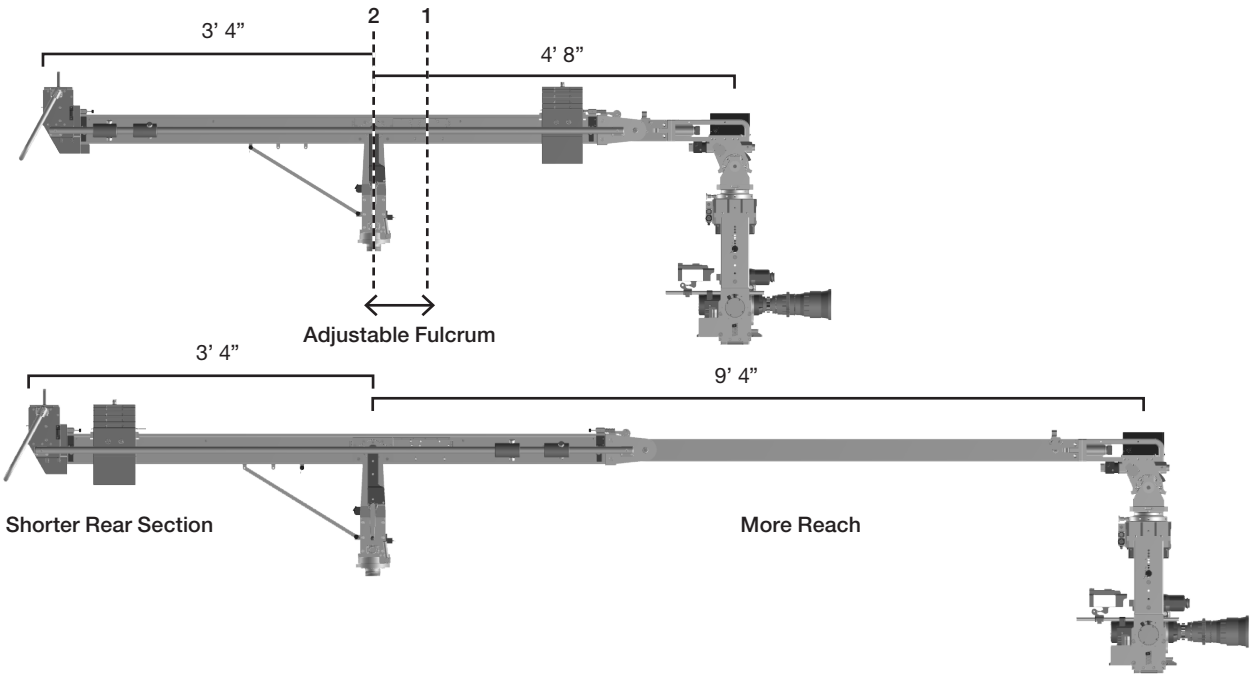

Alternate Positions

Miniscope 7

Position 1 - Standard Position

The Miniscope Alternate Position is easy to achieve by removing a few bolts from the adjustable fulcrum. This position is used to shorten the rear section of the Miniscope for tight spaces, and increase the reach where necessary.

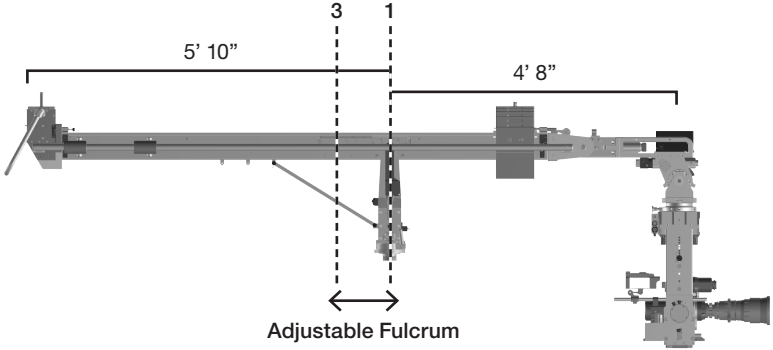

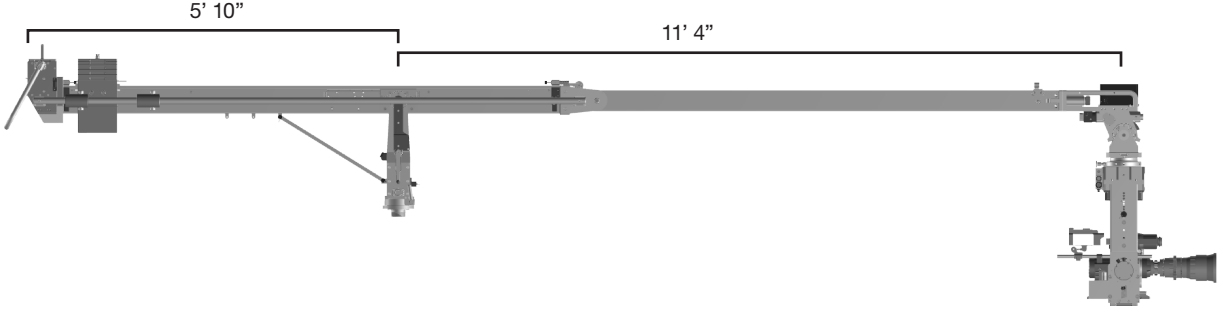

Position 2

An estimated 120-130 lb must be added as counter weight in this configuration.

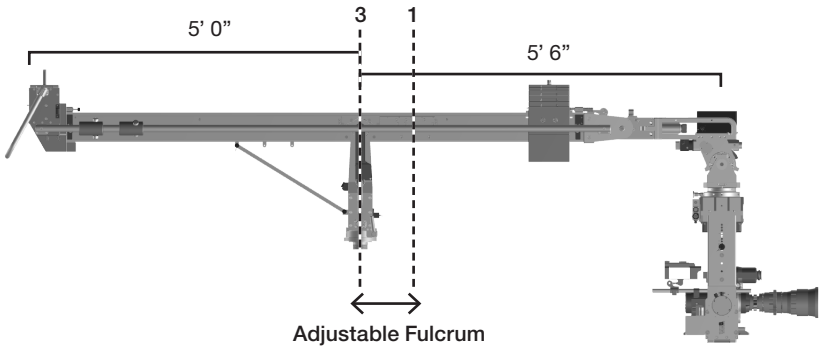

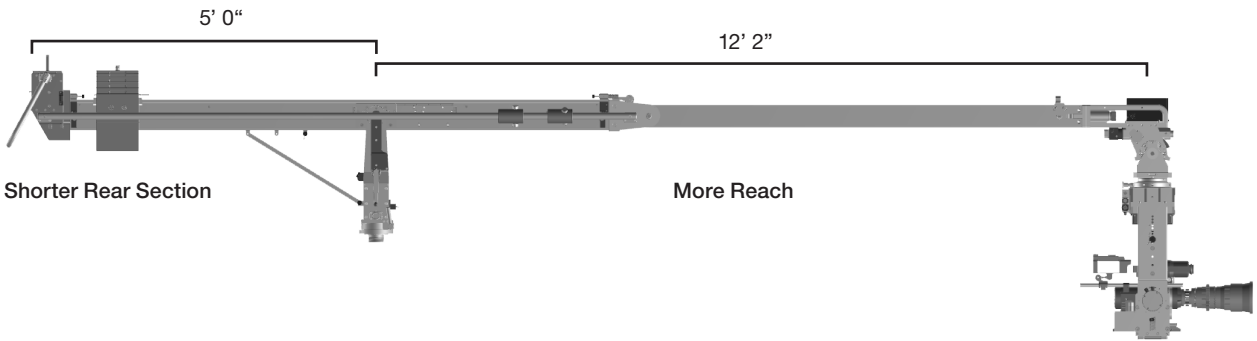

Alternate Positions
Configuration

1 Make sure the Miniscope is **retracted**, and that the Column Locking Pin is in place.

2 **Using Apple Boxes or Stands** to support both ends of the Miniscope as illustrated. Avoid putting weight on electric cables.

3 Remove all 12 Screws, 6 from both sides of the sliding plate. (Fig. 3)

4 Remove the Locking Bar. **Use caution** when removing the locking bar, and support the arm for any imbalance.

5 Support the Miniscope arm and Push the Minibase to move the fulcrum to the alternate position as illustrated. (Fig. 5)

6 Install all 12 Screws, 6 on each side. (Fig. 6)

7 Add appropriate counter weight-up to 130 lbs to balance the Miniscope.

8 To test the balance raise center post slightly. Add or remove weight as necessary.

9 Install the locking bar.

10 When the Miniscope is balanced you may remove the support stands.

Important!
Put the correct length back to its original spot for Fulcrum Screws.

The longer screws (1/2” Black Alloy Screws) are always the top (4 qty) & shorter screws (3/8” Silver Screws) are the last bottom (2 qty).

Fig 6. Fulcrum Panel Screws

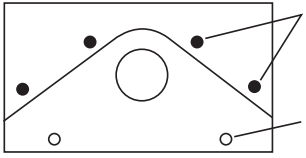

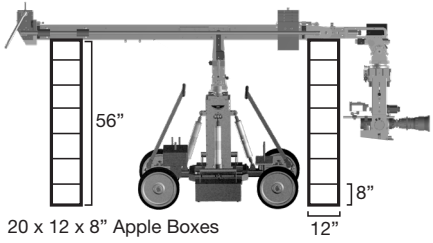

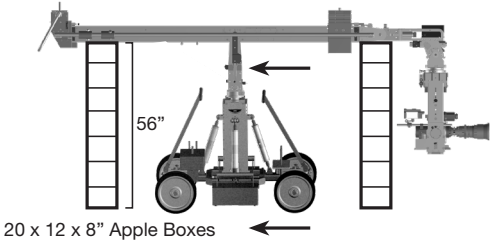

Fig 3.

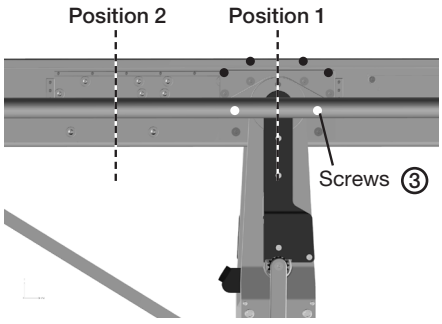

Use Caution!
Screws must be replaced correctly to avoid damaging the equipment.

Fig 5.

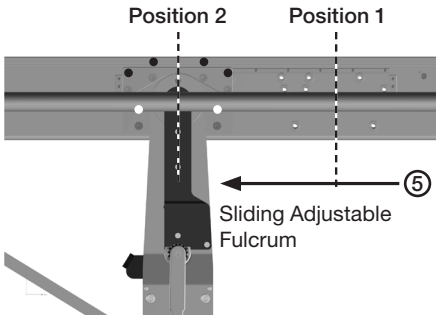

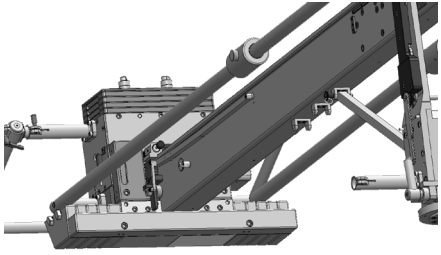

Use Caution!
Appropriate counter weight must be added before removing locking bar.

Miniscope Telescoping Zoom Shot

The Miniscope has the ability to perform a horizontal plane or linear shot without having to adjust the boom. This shot can be achieved from 9’ 3” above the ground to 7” from the ground when mounted on the Hybrid Dolly for a dynamic range of 8’ 8”.

Miniscope 5

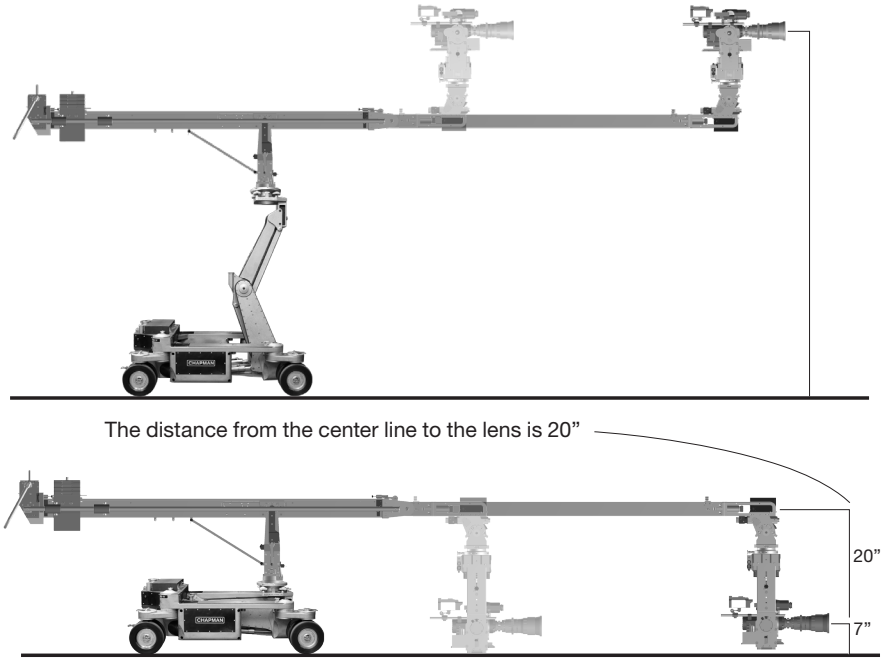

Miniscope 7

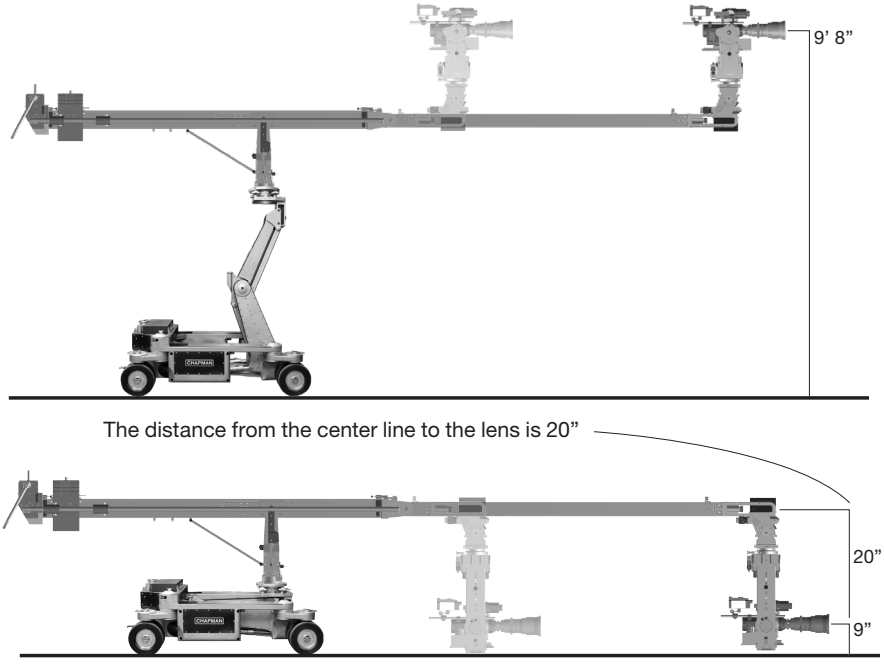

Miniscope Head Offset Accessory

The Head Offset Accessory offsets the payload, aligning the center of gravity with the column. This allows for a more compact configuration and improved performance when telescoping in and out.

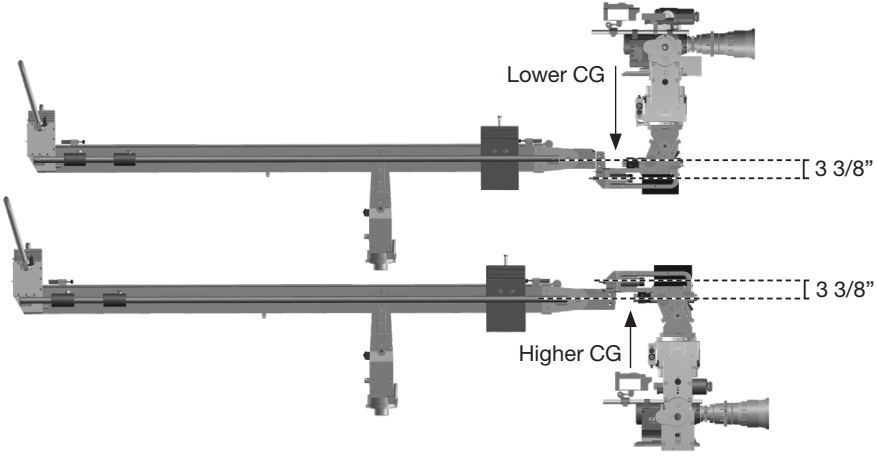

Mounting the Miniscope

Featured on the Hybrid IV Dolly

Warning!
The Locking Pin should remain in the arm when being transported. DO NOT Remove Locking Bar when Miniscope is out of balance.

Install Dolly Nose struts before mounting the Miniscope.

The Miniscope can be mounted on Chapman/Leonard's Hybrid IV Camera Dolly, as well as other Mitchell Mount bases. On a camera dolly the Miniscope has greater vertical travel, including the ability to go below ground.

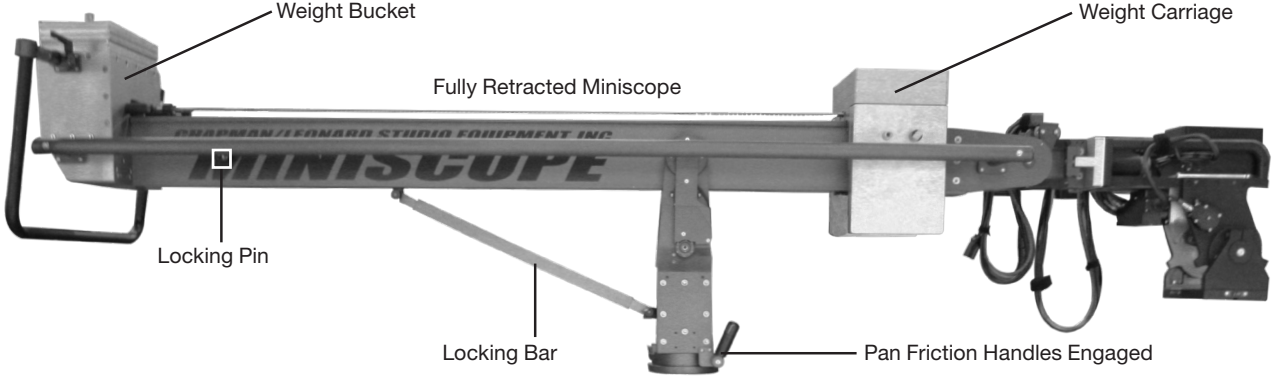

Mounting the Miniscope

Featured on the Hybrid IV Dolly

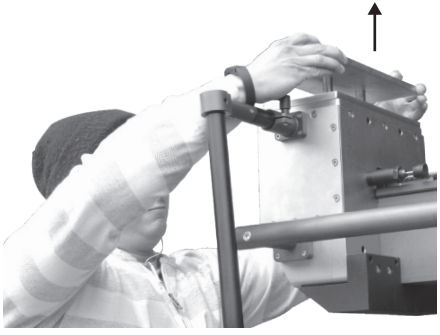

Remove all weights from the bucket of the Miniscope to make as light as possible.

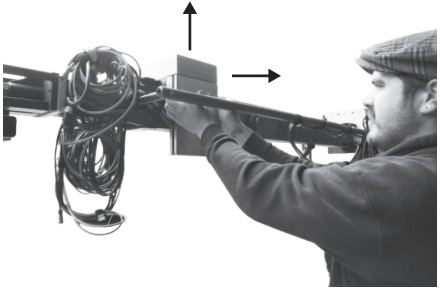

Remove all the weights from the sliding weight tray.

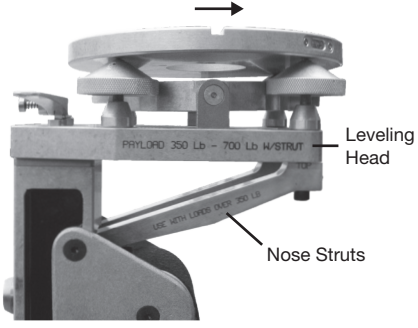

Level the Hybrid IV Mitchell Mount.

Note: The dolly leveling head should always face toward the center of the chassis to ensure stability when operating the Miniscope.

Carry the Miniscope fully retracted with locking bar and locking pin in place. (See page 18-21) The Miniscope can be safely carried between 4 people.

Caution!
The Rear section of the Miniscope is heavier, support any imbalance in weight.

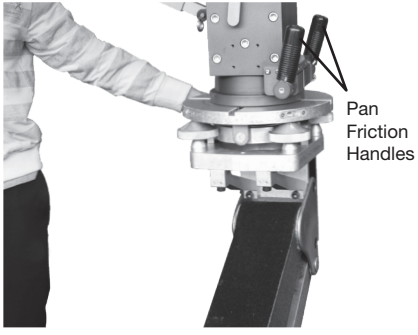

Place Miniscope on to the Mitchell Mount of the Hybrid IV, or other base and line up the keyway.

Note: When securing Miniscope onto the Mitchell Mount make sure that the pan friction handles are fully engaged.

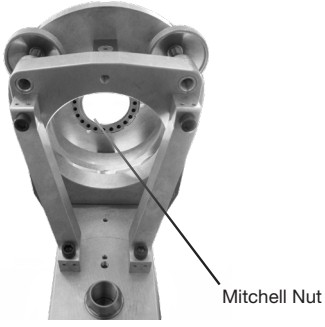

Once the Miniscope is placed on the mount, continue to support the rear of the Miniscope, and attach the Mitchell Nut.

Hand-tighten, then using the Hybrid Mitchell Nut Wrench to tighten fully.

Caution!
Support the weight of hte Miniscope until the Mitchell Nut is installed, with the keyway lined up, and fully tightened.

Mount the Miniscope on the Hybrid or Hustler Dolly

Labor Free

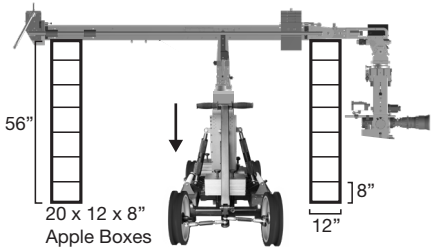

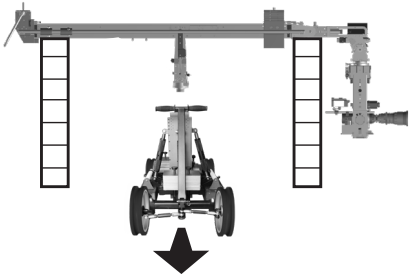

1 Make sure the Miniscope is **retracted**, and that the Column Locking Pin is **in place. Orient** the Miniscope **perpendicular** to Minibase.

2 **Using Apple Boxes or Stands** to support both ends of the Miniscope as illustrated. Avoid putting weight on wires.

3 Remove Mitchell Nut and lower column post.

4 After lowering the column post, roll the base away.

5 **Roll** the Hybrid Dolly into place, **Raise** the Arm on the dollly **carefully** into place and **Attach** the Mitchell Nut.

Castle Ring Application

Configuration

The Castle Ring Wrench is compatible with Castle Nuts - both circular and square pegs.

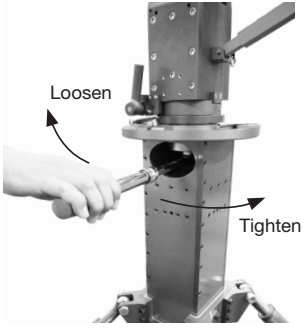

The Castle Ring Wrench attaches to the bottom of the Miniscope when the Miniscope is placed on the base. Hand-tighten, then cinch down with a wrench.

Castle Ring Application
Configuration

Hybrid Castle Ring & Wrench

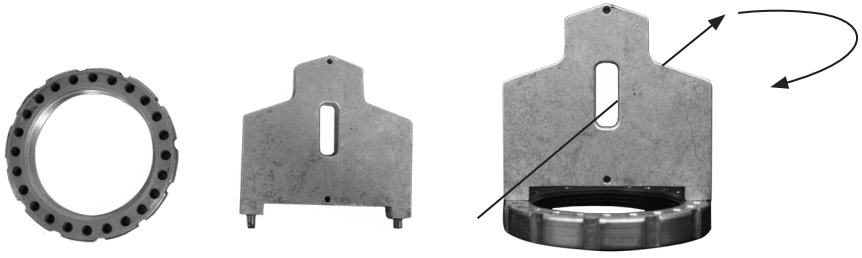

Insert pins into opposing holes in the ring, insert rod in the slot and twist to tighten ring.

Avoid over-tightening.

If the Castle Ring Wrench is unavailable

Use a hammer and rod to tap the castle ring tight. Be careful not to break pins or damage equipment.

Electric System Connections

Configuration

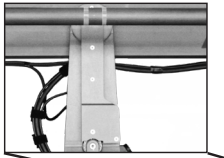

Secure wires from battery and base between yellow lines on the side rail with velcro to maintain balance and avoid over-stretching the wires.

Miniscope mounted on the Minibase.

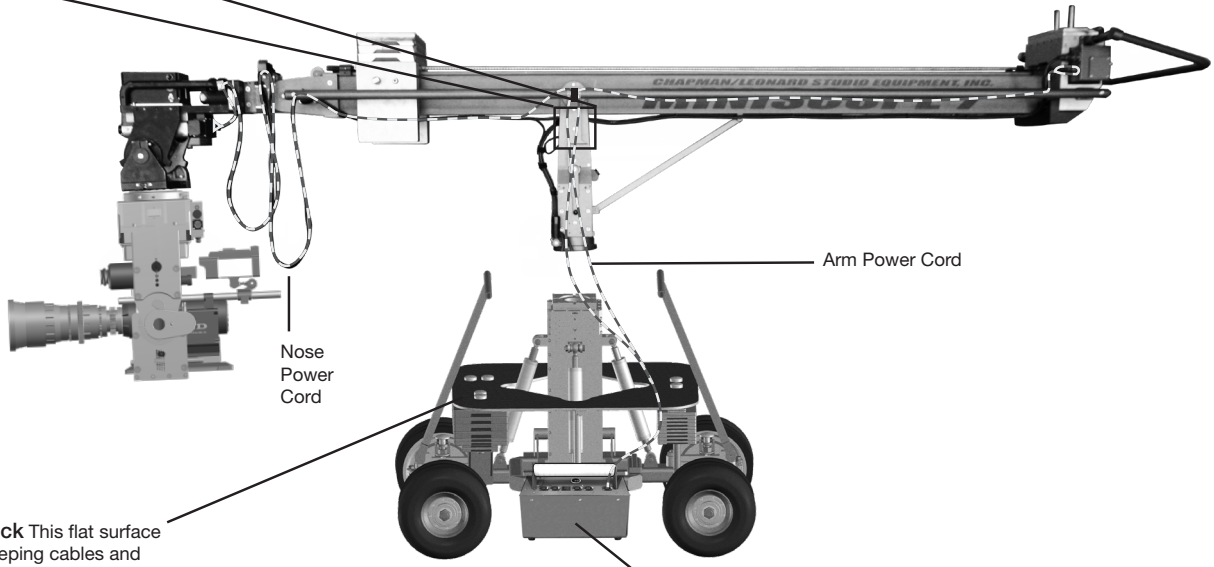

Arm Power Cord

Nose Power Cord

Minibase Deck This flat surface is useful for keeping cables and cords organized.

Miniscope Arm and Minibase powered by 30v Chapman/Leonard Battery or AC/DC Converter.

Electric System Connections
Configuration

Miniscope and Minibase powered by:

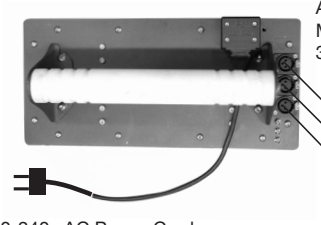

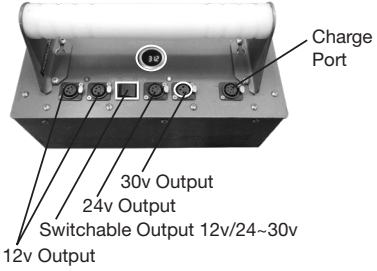

110-240v AC/DC converter

3 Interchangeable power sources for:
30v Electric Center Post Lift
30v Miniscope Leveling Nose
30v Miniscope Telescoping Arm

Chapman / Leonard DC Battery

Charge battery when Digital Voltage Display reads below 29v.

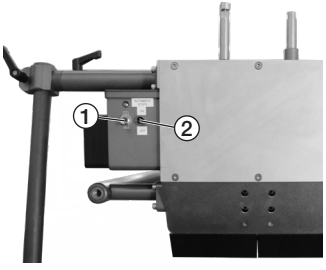

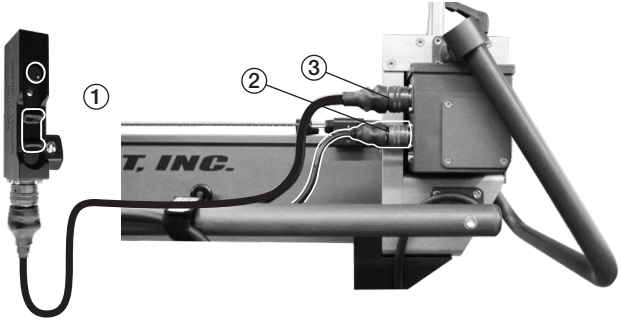

1 Miniscope Main Power Switch

To eliminate drift on long lock off shots, power off the Miniscope. There are switches on the back of the Miniscope.

Miniscope should be powered off when used manually.

2 Automated Stop Power Switch **(Disable/Enable)**

1 Joystick Controller

To eliminate drift on long lock off shots, power off the Miniscope. There are switches on the Joystick

2 Miniscope Power Connector

3 Joystick Cable Controller

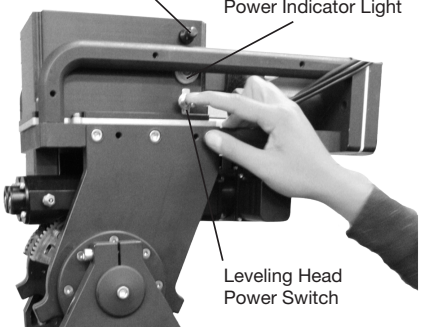
Leveling Head Potentiometer Adjustment
Power Indicator Light
Leveling Head Power Switch

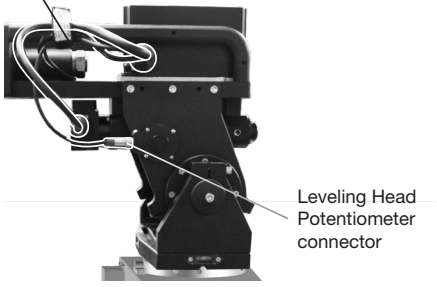
Leveling Head Motor Power Connector
Leveling Head Potentiometer connector

Joystick Connector

Caution!
Avoid frequent connecting and disconnecting to minimize damage to pins and key-way.

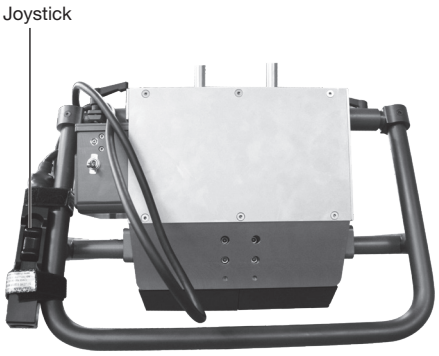

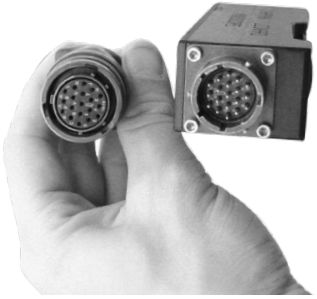

Line up Key-way on Joystick Connector

Note: Colored tags make it easy to line up key-ways and connections.

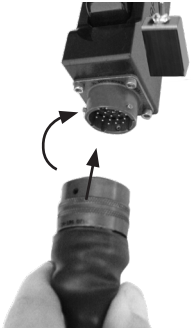

Insert and Turn Clockwise

Joystick Controls

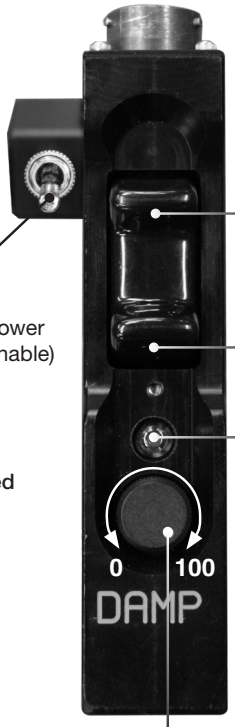

Arm Out

Arm In

Power Indicator Light

Secondary Arm Power Switch (Disable/Enable)

Positions:
Up - Hi Speed
Middle - Off
Down - Low Speed

Use Arm Power Disable Switch to completely eliminate drift for stationary shots.

Dampening / Feathering

Speed

Drift

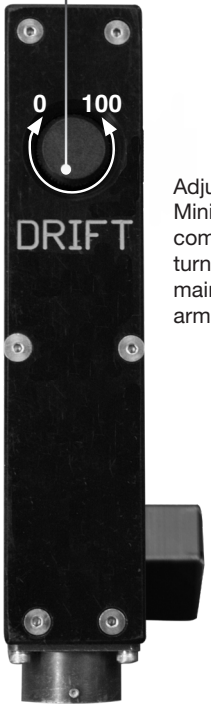

Adjust drift until Miniscope is stationary. To completely eliminate drift, turn off the Miniscope main power or secondary arm power switch.

Balancing the Miniscope

Configuration

1 The Crane must be balanced before use. The **nose payload** must be present before you can achieve a properly balanced arm.

2 With the Locking Bar in place for safety, apply Nose Payload. (Head, camera and accessories.) And connect the power cables.

Note: The Nose Payload includes the camera, head attachment, and any accessories. If extra accessories are added, or if the head is Overslung or Underslung the arm must be re-balanced.

3 **Remove the arm locking pin.**

This will allow the operator to move the weight tray to the center fulcrum of the Miniscope. **The Locking Bar should remain in place.**

4 With the power off, Manually move Weight Carriage to **center** of fulcrum. Monitor Weight Carriage to ensure that it stays over the fulcrum through step 5.

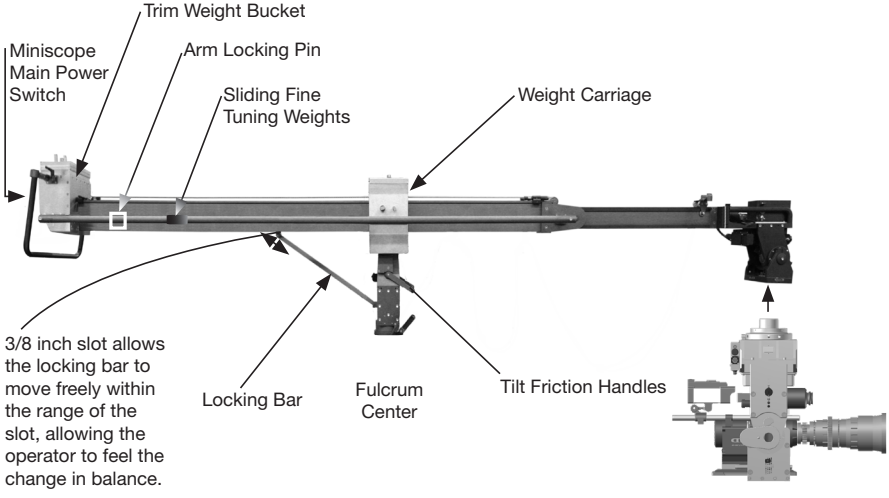

Balancing the Miniscope
Configuration

Warning! Always secure weights with spacers and wing nuts.

5 First release the Tilt Friction Handle. Then add Bucket Trim Weights until the Miniscope feels balanced on the 3/8 inch slot. When the Miniscope floats on the 3/8” slot, the Miniscope should be balanced. It is important to keep the Weight carriage over the fulcrum during this step.

6 Balance the Weight Carriage to achieve dynamic balance of the Miniscope:

Extend the arm so the carriage moves away from the fulcrum. Then add Carriage Weights until the Miniscope feels balanced on the 3/8 inch slot*. When the Miniscope floats on the 3/8” slot, the Miniscope should be balanced. Fully extend the arm, and confirm that the arm is still in balance.

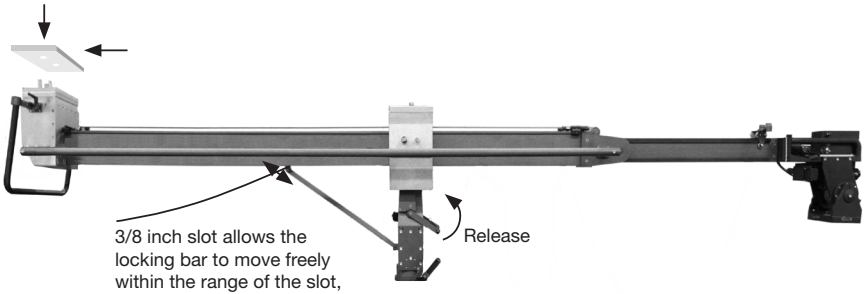

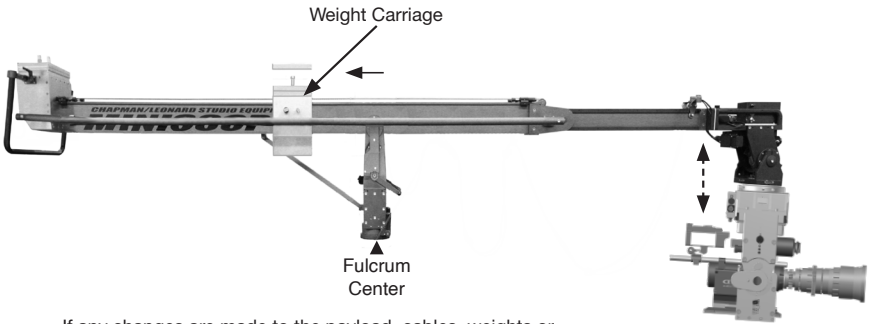

If any changes are made to the payload, cables, weights or accessories, the Miniscope may need to be rebalanced.

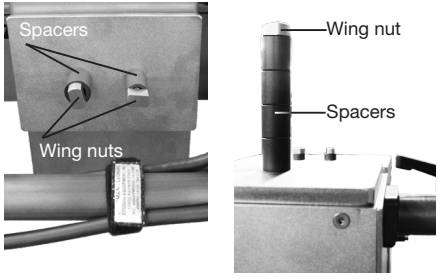

Installing spacers and wing nuts on the carriage

Warning!
Always secure weights with spacers and wing nuts.

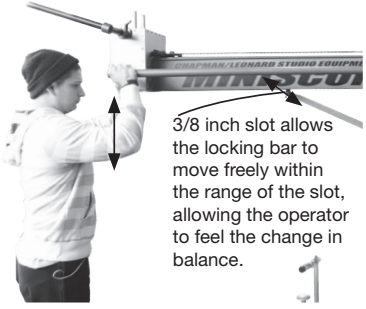

3/8 inch pin

When the Miniscope is balanced the operator may remove the locking bar. The Locking Bar is designed to slide on a 1/4 inch pin that allows the locking bar to move freely within the range of a 3/8 inch slot. This will allow the operator to feel the change in balance if he moves the arm up or down.

Caution!
If the Miniscope is not perfectly balanced it may allow unwanted telescoping movement to occur due to AC power failure, or when the miniscope is used manually.

When the Miniscope is balanced it will easily boom up and down and remain in any position. Sliding the fine tuning weights on the side rail will aid in maintaining arm balance.

Leveling the Nose

Note: Before the Leveling Head is adjusted make sure the post on the base is level.

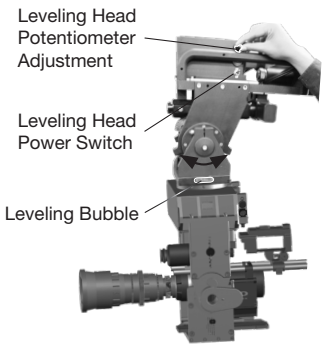

With the Leveling Head powered on, use the Leveling Head Potentiometer Adjustment to adjust the level of the Nose. Reference the Leveling Bubble for accuracy of level.

To Level the Minibase use the built-in levels. Turn the leveling bars in opposite directions (in unison) to observe the way the post moves. Adjust posts using the leveling bars until the axis is level according to the bubble.

Repeat process for opposite set of leveling bars. When level is complete, re-tension one side to eliminate possible play.

Overslinging the Nose

Note: Bucket weight may need to be adjusted when going from Underslung to Overslung and vice-versa.

The Miniscope, like our Hydrascope, provides the convenient option of rotating the Nose to place the camera above the arm (Overslung). It is not necessary to remove the camera or head to bring the camera to the Overslung position. This process saves production time and allows the operator to move quickly and efficiently on set.

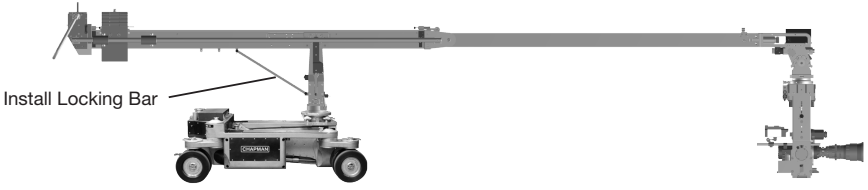

1 Install the Miniscope locking bar in order to lock the arm in the horizontal position. This will help stabilize the arm throughout the process.

Overslinging the Nose

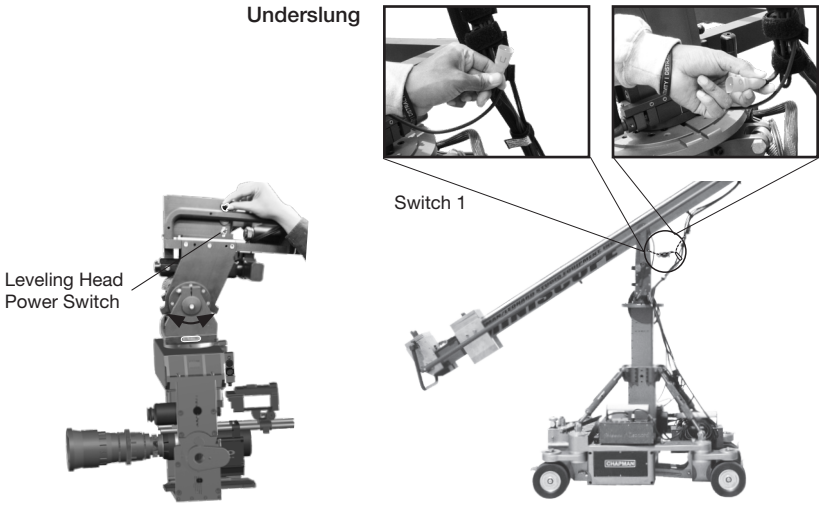

2 Make sure the leveling head is powered on and the nose is level.

Overslinging the Nose

Warning!
The Leveling Head will not function properly if the switch is in the wrong position.

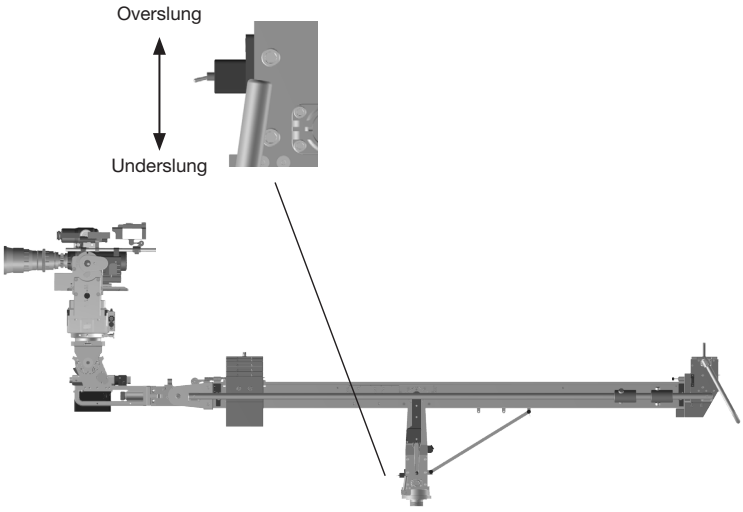

3 Change the direction of the switch to match the desired position of use (Overslung or Underslung)

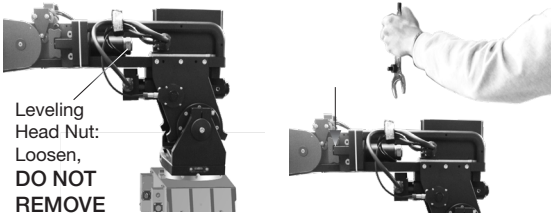

4 Loosen the 1 inch nut located near the front section of the leveling head. You may loosen the nut from the top section of the leveling head as shown in the illustration. The 1 1/2 inch wrench is included with the standard package.

Overslinging the Nose

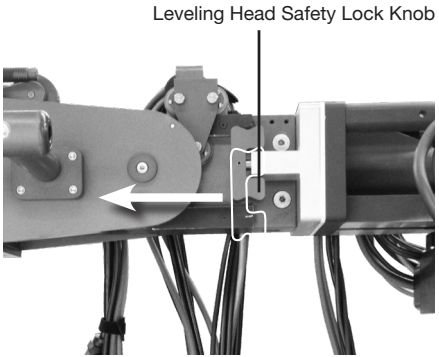

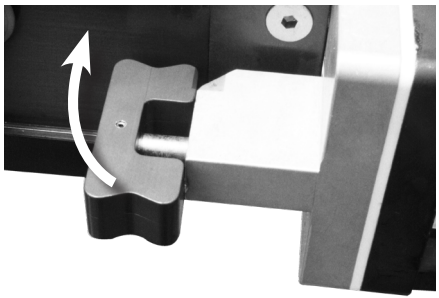

5 Pull and **twist** the safety lock knob to disengage the leveling head. When re-engaging the safety lock knob make sure the locking pin **fully** engages the mechanism. The locking mechanism is spring loaded and automatically engages when aligned properly.

5 Two people can carefully rotate the entire Leveling Head with the payload attached. Rotate the payload **clockwise** to the upright position (Overslung position) and re-engage the Leveling Head safety lock knob. Make sure the locking pin **fully** engages the mechanism.

Overslinging the Nose

Caution!
Rotate the Leveling Head clockwise when overslinging and counter clockwise when underslinging as shown in the illustration. This will prevent over stretching or damage to the wire harness.

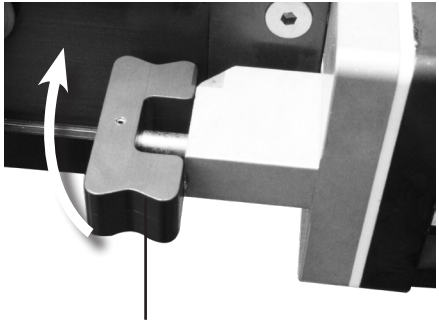

Leveling Head Safety Lock Knob

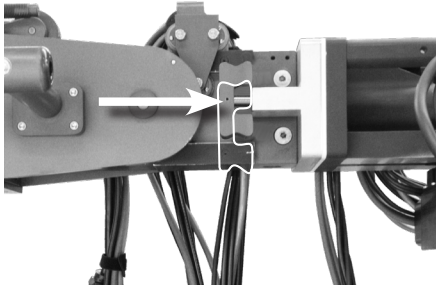

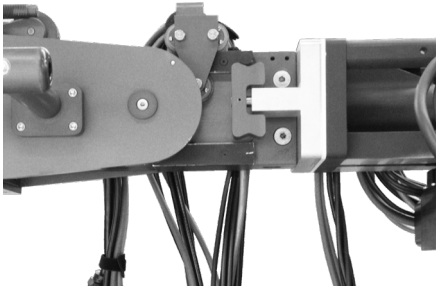

Overslinging the Nose

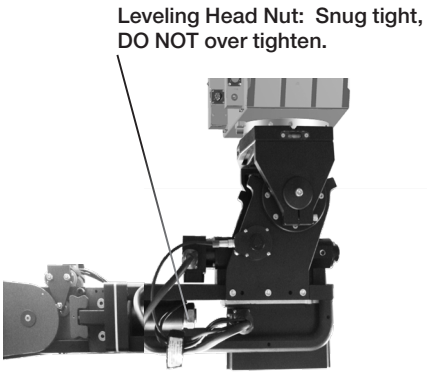

7 Re-tighten the 1 inch Leveling Head Nut. The nut should be snug, use care to prevent over tightening.

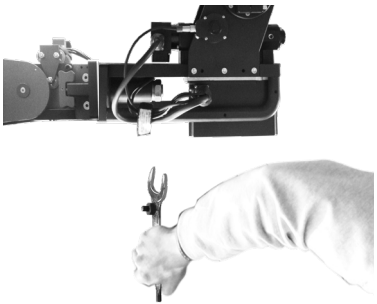

8 Double check nose level and re-adjust the leveling head if necessary.

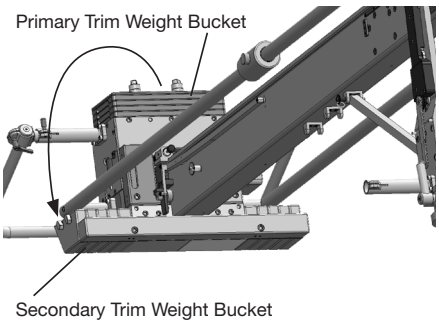

Overslinging the Nose

10 Remove the Miniscope locking bar and boom the arm up/down and confirm the leveling head is operating correctly.

Leveling the Minibase

Configuration

Caution!
The Minibase arm should be leveled before and after mounting the Miniscope, as well as after any significant amount of travel.

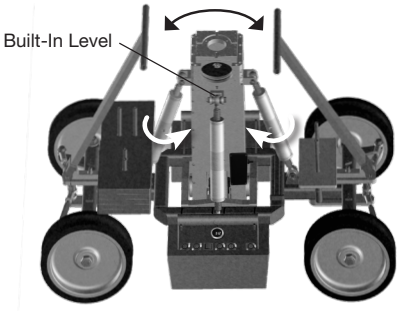

Level Axis 1

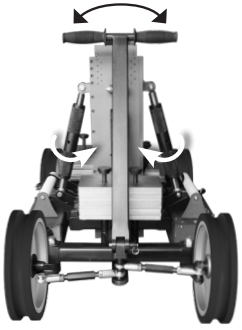

Level Axis 2

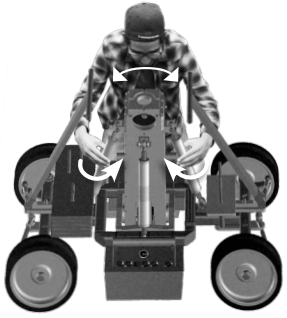

Rotate in opposite directions and turn in unison.

To Level the Minibase use the built-in levels. Turn the leveling bars in opposite directions (and in unison) to observe the way the post moves. Adjust posts using the leveling bars until the axis is level according to the bubble. Repeat process on opposite axes.

Installing the Nose Strut and Leveling the Hybrid IV Head

Configuration

Caution!
The Mount should be leveled before and after mounting the Miniscope, as well as after any significant amount of travel.

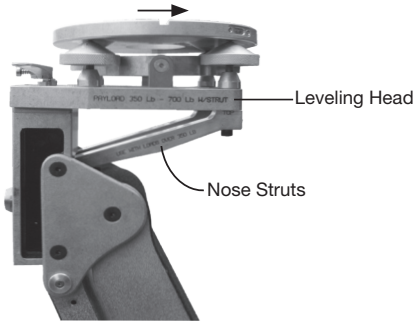

Installing the Nose Struts

Before leveling the Mitchell Mount, or mounting the Miniscope, the Nose Struts must be attached. The dolly leveling head should always face toward the center of the chassis to ensure stability when using the Hybrid IV dolly.

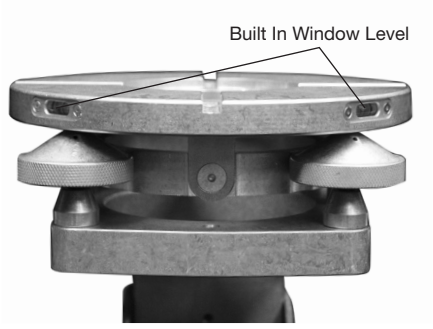

Leveling the Hybrid IV Head

When the Miniscope is placed on the Indexed GQ Leveling Head, the head must be leveled to avoid unleveled images when filming.

The operator should position himself in front of one of the built-in window levels. Turn the leveling knobs in opposite directions (and in unison) to observe the way the Mitchell Mount moves. Adjust the Mitchell Mount until the bubble is centered. Repeat process using remaining set of knobs.

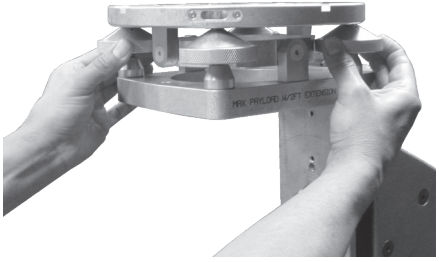

Level Axis One

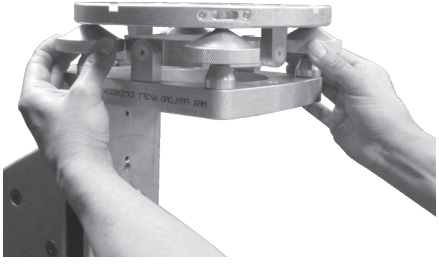

Level Axis Two

Leveling the Ultra Hy Hy

Configuration

Caution!
The Mount should be leveled before and after mounting the Miniscope, as well as after any significant amount of travel.

Level

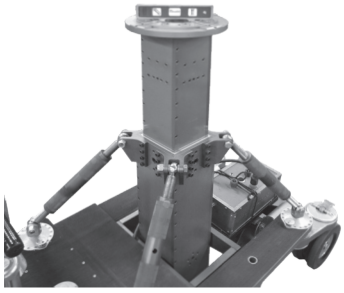

Line the pocket level up with bars you wish to level. Turn the leveling bars in opposite directions (and in unison) to observe the way the Hy Hy post moves. Adjust plane using the leveling bars until the bubble is centered. Repeat process using remaining set of bars.

Turn In Unison

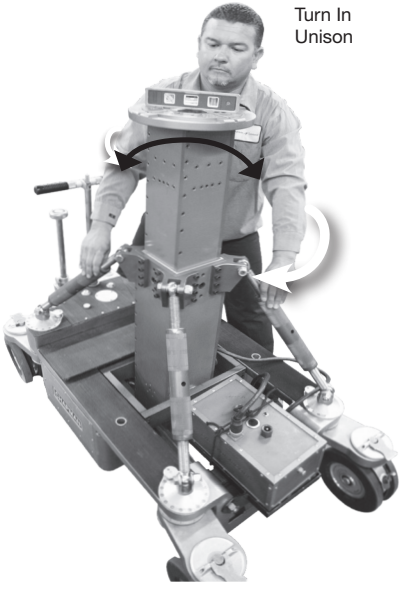

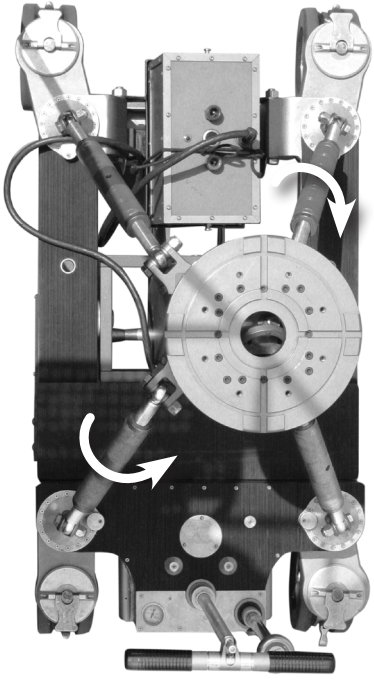

Leveling the Hy Hy Base

Configuration

Leveling the Hy Hy is easy with leveling bubbles attached to the post. Turn the leveling bars in opposite directions (and in unison) to observe the way the Hy Hy post moves. Adjust plane using the leveling bars until the axis appears level according to the bubble. Repeat process using remaining set of bars.

The mount should be leveled before and after mounting the Miniscope, as well as after any significant amount of travel.

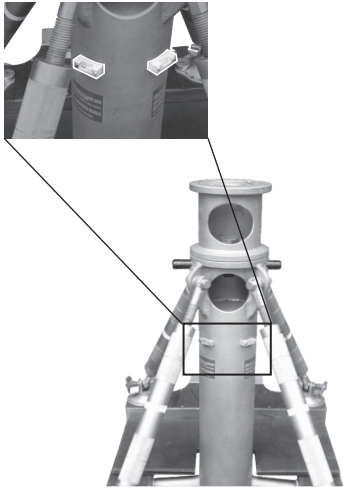

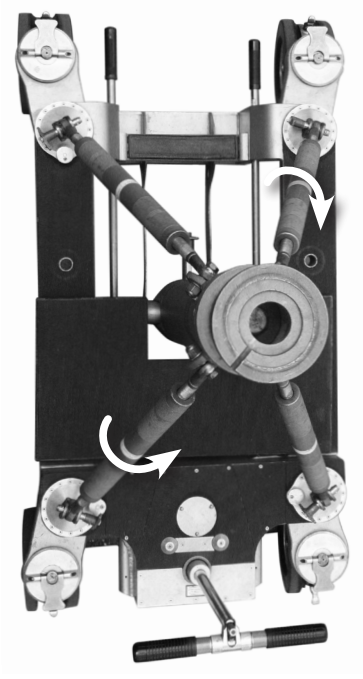

Minibase Features

Note: There is no front or back on the Minibase.

1. **Removable Steering Base Handle**
   The handle can be removed and used with the Hybrid IV Camera Dolly.
2. **Steering Bar Release Pin**
   Pull and twist to disengage. Twist til pin drops into receiver to re-engage.
3. **Minibase Deck**
   This flat surface is useful for keeping cables and cords organized.
4. **Soft Pneumatic Tires Accessory**
5. **Weight Storage**
   Stores the bucket trim weight and carriage weight.
6. **Chapman Battery and AC/DC Converter**

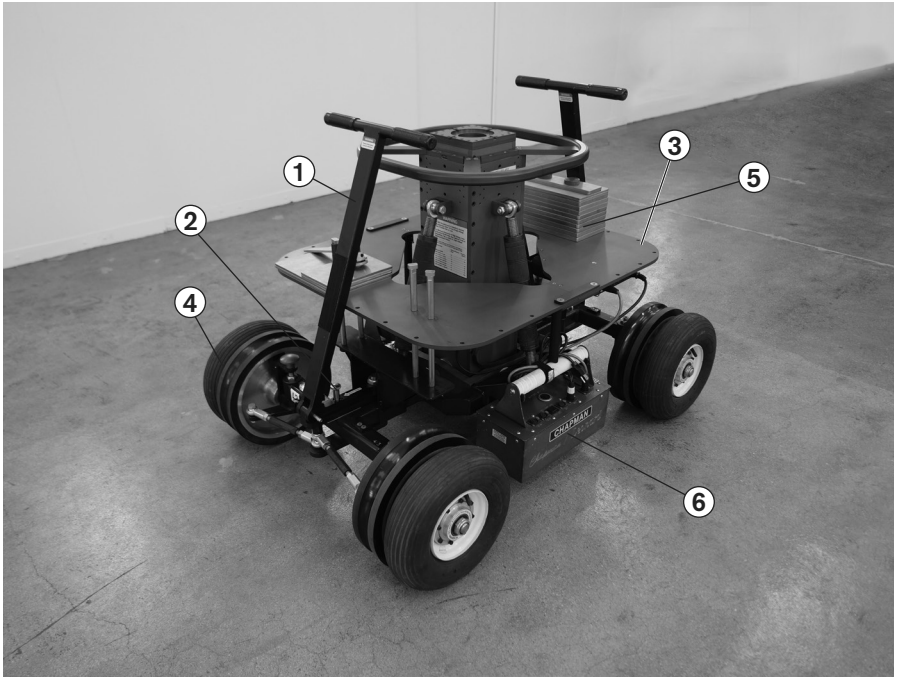

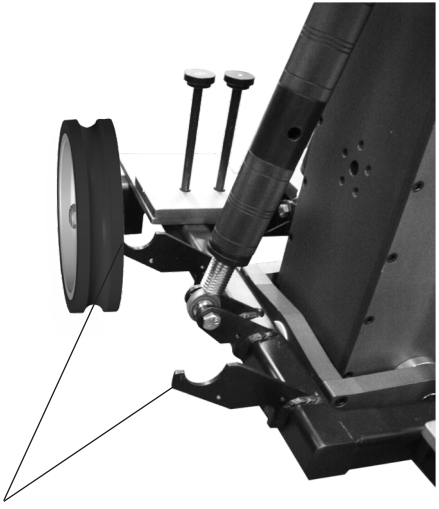

Battery Hooks
Designed for holding Chapman Batteries, or AC/DC converters that will power the Minibase Lift, as well as the Miniscope arm and nose.

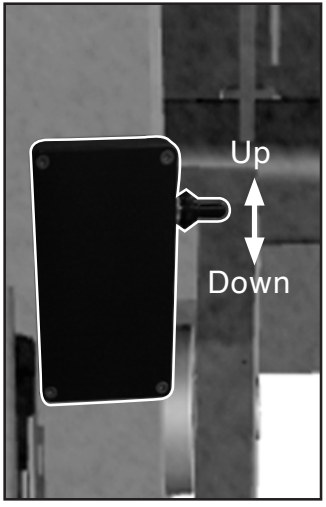

Actuator Switch
Moves the Minibase center post up and down with 16” of travel.

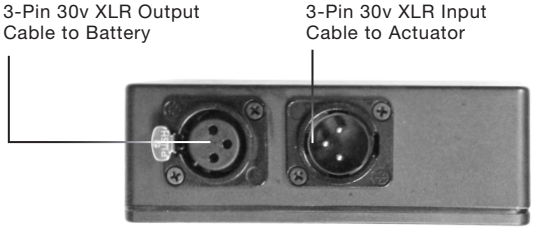

Actuator Switch Input/Output

Minibase Specifications

Note: The Minibase can be equipped with a remote linear actuator and/or remote control steerring for an additional cost.

Top View

Soft Pneumatic Tire Extensions

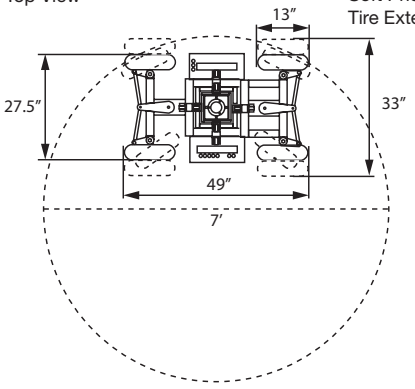

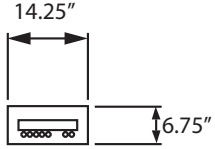

30 Chapman Power Source: 1 Chapman Battery and AC/DC Converter
will power the telescoping arm, camera system and electronic lift of the Minibase. The Batteries and Converter also act as weights for the base to lower the center of gravity. The system can be controlled manually or remotely by a single operator.

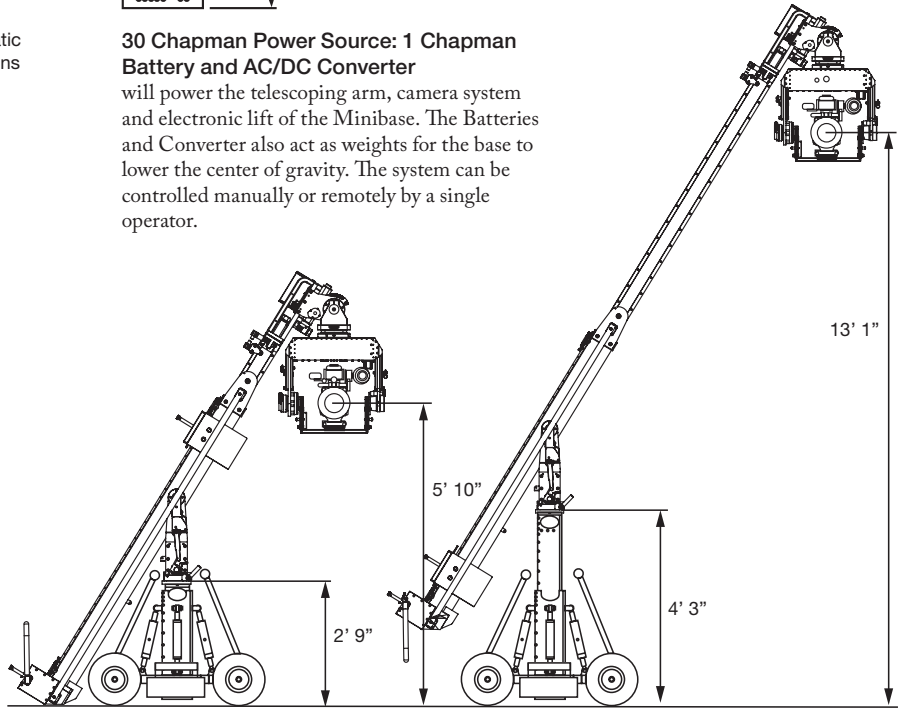

Minibase Automated Steering

Note: The steering handle and Linear Actuator are NOT to be used together. Remove Linear Actuator before using steering handle.

The Linear Actuator is by special request only.

The Linear Actuator allows the Minibase steering to be done remotely from either side of the base.

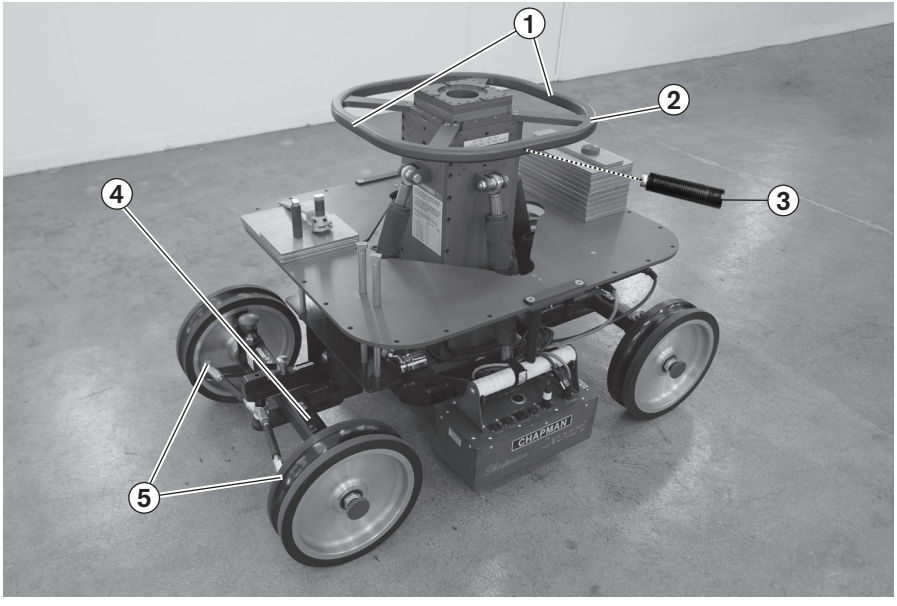

1 Actuator Switch Accessory

2 Minibase Push Handle

3 Push Handle

4 Steering Linear Actuator Accessory

5 The Actuator can be removed using two knobs.

Minibase Universal Handle Accessory

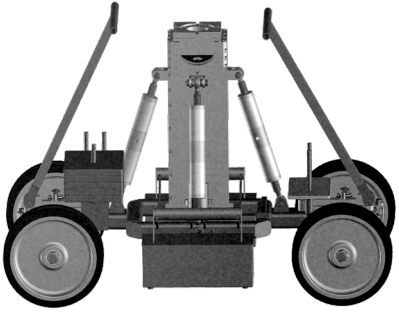

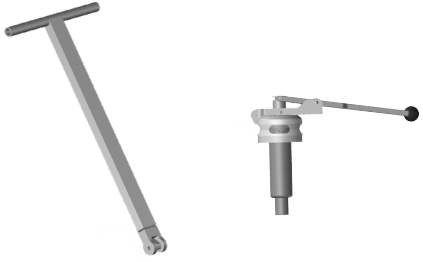

The **Minibase Handle Adapter** allows the Minibase Handle to be used on any Chapman dolly, including the Hybrid IV and Hustler IV camera dollies, as well as the Ultra Hy Hy and Hy Hy bases. The handle is designed to be put up or down so that the Miniscope has room to move 360° around the chassis.

The **Handle Adapter** shifts the dolly into crab or conventional steering while using the Minibase Handle.

Minibase on Track and Off-Road Tires

Configurations

Warning!
Harmful Vapor can cause eye, skin and respiratory irritation.

The standard tires for the Minibase are hard rubber tires designed for track and flat surfaces.

The Minibase can be used on both standard 24.5" track (Fig. A) and 880mm track with extensions (Fig. B).

Warning!
Friction brakes will not activate on 880mm track.

Note: 880mm Brake extensions and axle extensions are included.

Soft pneumatic tires are available with an adapter, and will allow the Minibase to be used on sand and other off-road surfaces.

For Example: If there is a tracking shot on a beach, the pneumatic tires will act as transport wheels, and the base can simply be rolled onto the 24.5" track. (The pneumatic tires are slightly larger than the hard tires.)

A

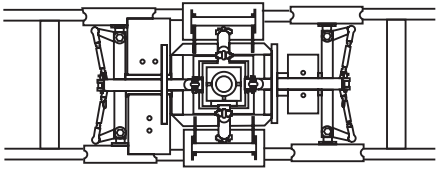

B

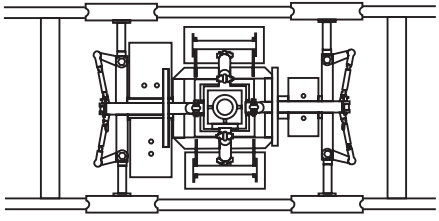

C

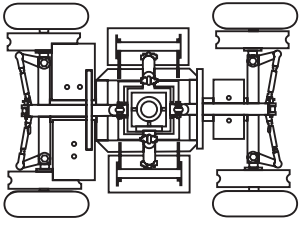

Within each can of Silicone Spray, we provided a sponge to prevent harmful vapor exposer when used indoors. Spray the Silicone solution onto the sponge, then quickly wipe the desired area.

Spray the tires with Zep Par NC Silicone Spray (Key Words on Label are "Mold Release Agent"). This dramatically improves Tire Performance on Tile Floors, Hardwood, Track and even on Concrete. Use the same spray to clean the Tires.

Must apply Silicon Spray while wet for best results.

Note: When base is in use on a curved track to prevent dolly from derailing use ZEP Silicone Spray.

Using the Minibase on Curve Track

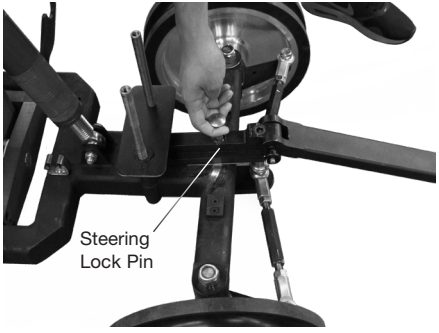

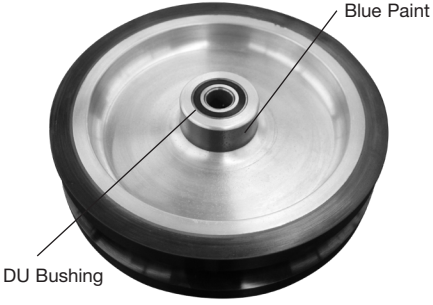

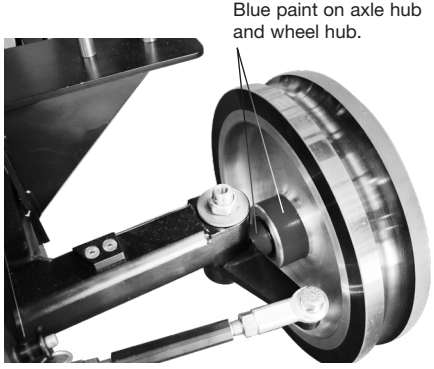

1 Before preparing the Minibase for curve track, roll the Minibase on to straight track using starter track and remove the pneumatic tires.

2 Pull and twist the Steering Lock Pin on both sides of the Minibase to release both steering handles.

Note: Be sure that the steering handle is perpendicular to the axle before resetting steering lock.)

3 Be sure the wheels equipped with the DU bushing are on the outside curve side of the Minibase. The wheels with the DU bushing are marked with blue paint on the inside hub of the wheel.

1.5” Speed wrench

Safety End Cap

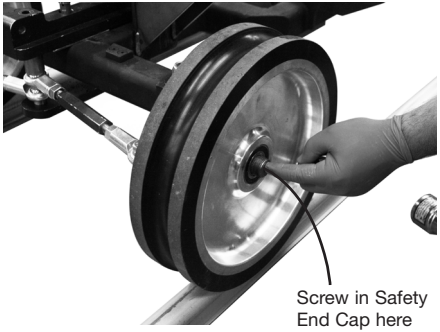

Screw in Safety End Cap here

Safety Cap in place

Outside set of wheels with DU bushing.

4 Remove the 1” nut from the axle using a speed wrench. Screw the safety end cap into the threaded axle to allow the DU bushing to slide on the axle as it enters the curve.

As the outside wheels enter the curve, the DU bushing will slide on the threaded axle.

5 Lubricate the concave track groove on the Minibase Tires using the sponge provided with Zep Par Mold Release Spray.

6 The Minibase is ready to be used on curve track.

Using the Minibase on Curve Track

Wheels to be used on the outside curve of the track are marked with blue paint on the inside hub of the wheel and axle. These wheels contain DU bushing and will articulate to accommodate the curve.

The fixed wheels that are to be used on the inside curve of the track are unmarked. These wheels are fixed and should be kept on the brake side.

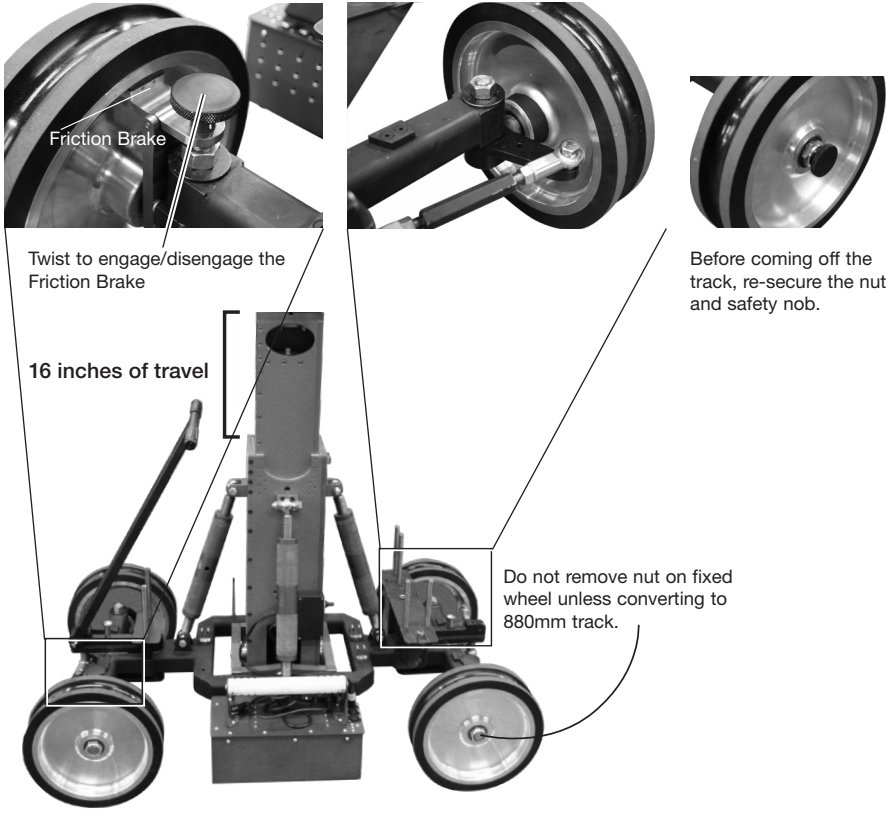

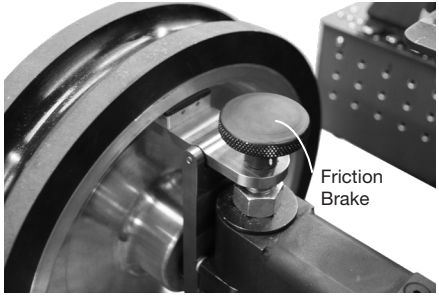

1 When moving up or down a grade, lock the rear axle and partially engage the rear friction brake.

2 Steer uphill for maximum control.

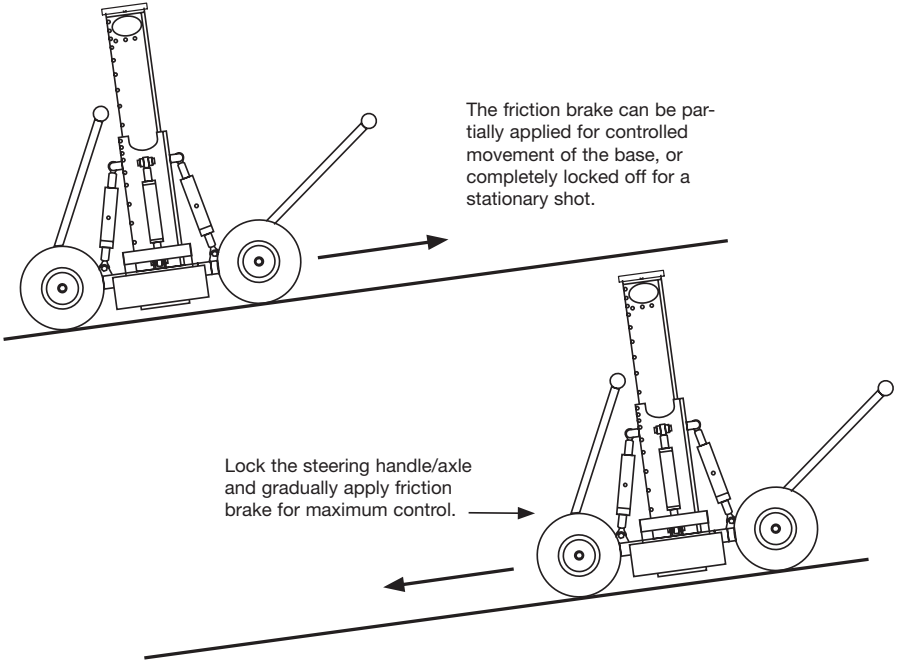

Maintenance

Always read Warning Labels.
Note: When Dolly is in use on a curved, to prevent dolly from derailing use ZEP Silicone Spray.

Always begin cleaning the equipment with a Vacuum Cleaner. Never use an air hose, because dirt metal shavings will find their way into joints and bearings. This can seriously shorten the life of the equipment.

Never directly spray the equipment with water. Use soap and water appllied to a cloth or paper towel, or preferably a brush to wipe down the rubber and metal parts of the equipment.

Wax the exterior of the equipment using **Megular's Mirror Glaze Cleaner Wax.** This keeps the equipment cleaner during regular use and preserved the finish. Clean equipment will ensure optimum performance with smooth and quiet movements while enhanching its aesthetics.

Spray the tires with **Zep Par NC Silicone Spray** (Key Words on Label are "Mold Release Agent"). This dramatically improves tire performance on tile floors, hardwood, track and even on concrete. Use the same spray to clean the tires. **Must apply Silicon Spray while wet for best results**.

For Metal

For Rubber and Plastic

Shipping & Rental Return

Warning!
DO NOT use ratchet straps to tie down the Miniscope as it may stress the arm. Ratchet straps may only be used on the Minibase Chassis.

The **Miniscope** must be properly crated before shipment (see next page). Make sure to attain a signed receipt from your chosen transport company to confirm shipment.

Rental bays are located on the left, immediately after entering the Chapman / Leonard facility. Trucks should be backed into the bays for easier loading. If no bays are available, please park on Raymer Street and advise the Rental Office of your arrival.

A customer service agent will notify you once a space becomes available.

All drivers must report to the rental office to process paperwork before loading/unloading may begin. Our Rental Staff is well trained to process equipment and documents efficiently.

Address

Chapman/Leonard Studio Equipment, Inc.
12950 Raymer Street
North Hollywood, CA 91605

Rental Office Hours

Monday - Friday	7am - 6pm
Saturdays	8am - 12 pm

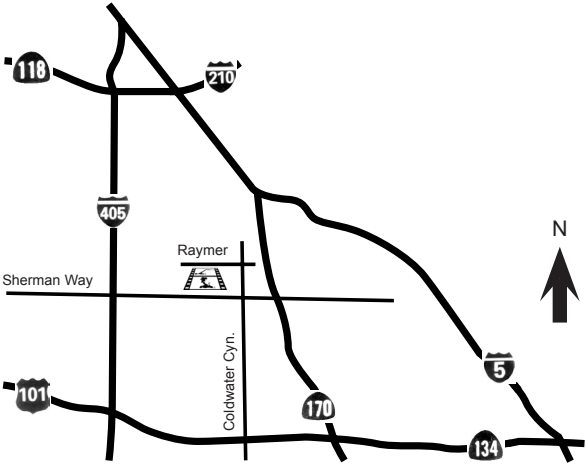

CHAPMAN/LEONARD

STUDIO EQUIPMENT INC.